Halsey Taylor® Owners Manual

Contour™ Barrier-Free Fountains

with Dual-Stream Bubbler™ and HydroBoost® Bottle Filler

HTHB-HRFSEBP-I

HTHBWF-HRFSEBP-I

INSTALLER

CAUTION: Review these instructions before beginning installation. Be sure that installation conforms to all plumbing, electrical and other applicable codes.

WARNING: When installation is complete, ensure these instructions are left in the plastic bag provided inside the installed unit for future reference.

WARNING: Service to be performed by authorized service personnel only.

NOTE: It is common practice to ground electrical hardware such as telephones, computers and other devices to available water lines. This can, however, cause electrical feedback in the plumbing circuit, which results in an “electrolysis” effect occurring in the fountain. This may result in water which has a metallic taste to it or has a noticeable increase in the metallic content of the water.

When inspecting plumbing circuit, remember the line may be grounded some distance from the installation, and may occur outside the building or area in which the unit is being installed.

This condition can be avoided (in most cases) by using recommended materials during installation. Any drain fittings provided by the installer should be made of ***plastic*** which will *electronically isolate* the fountain from the remainder of the building’s plumbing circuits.

NOTE: DANGER! ELECTRICAL SHOCK HAZARD. DISCONNECT POWER BEFORE SERVICING UNIT.

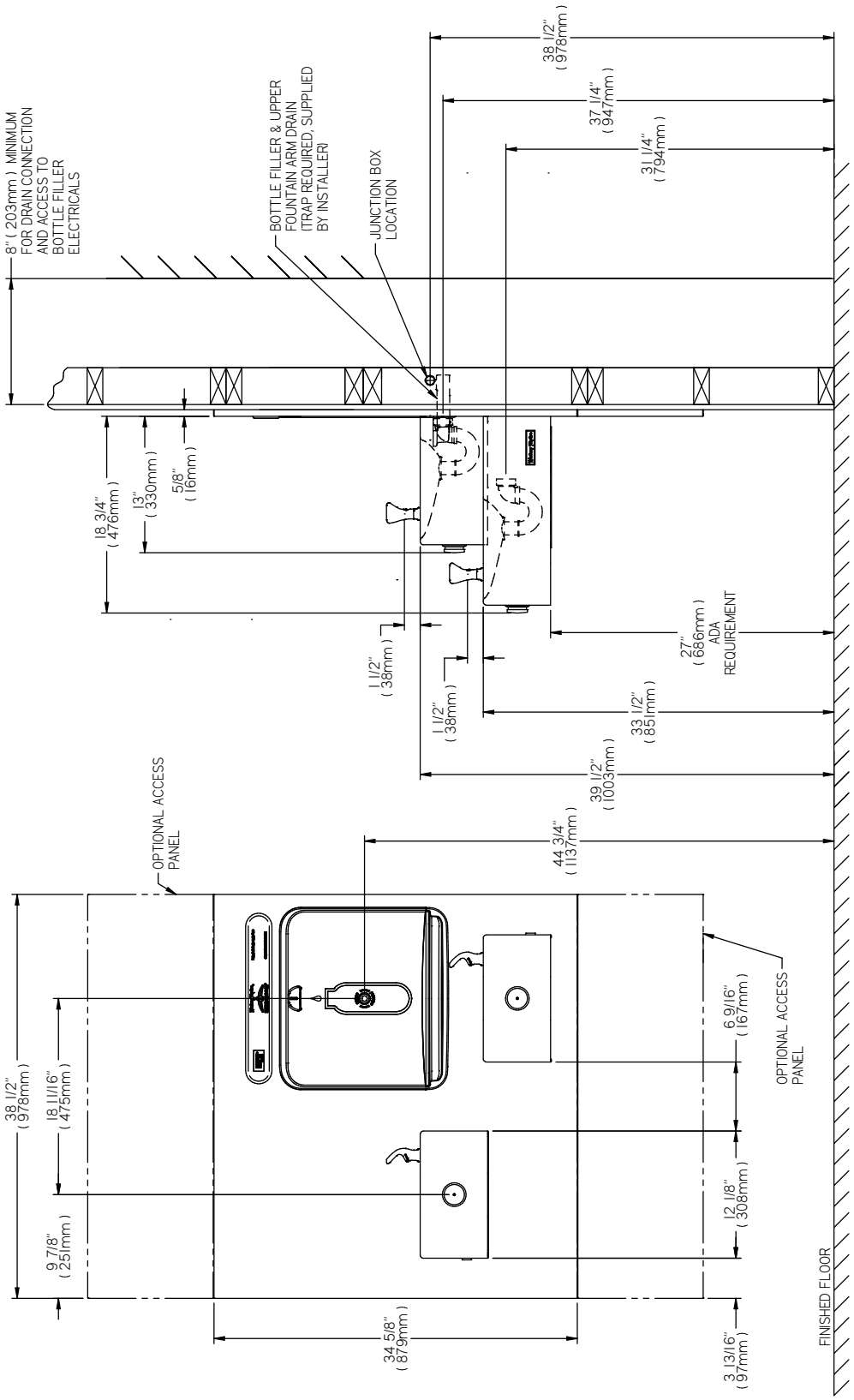

****NEW INSTALLATIONS MUST USE GROUND FAULT CIRCUIT INTERRUPTER *GFCI)**

MAXIMUM WATER SUPPLY PRESSURE : 105 PSI (0.73 MPa)

Figure 1 - Rough-in Dimensions

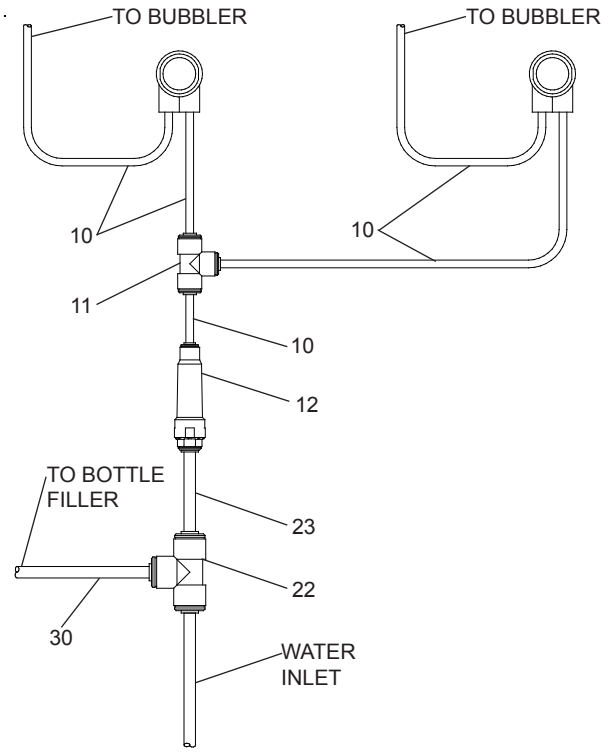

Figure 2 - HTHB-HRFSEBP-I Tube Routing

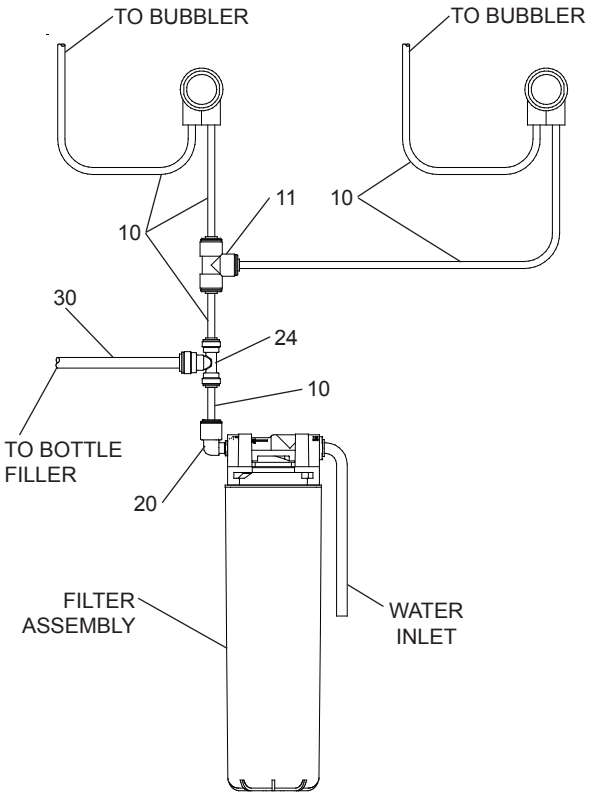

Figure 3 - HTHBWF-HRFSEBP-I Tube Routing

REQUIRED TOOLS AND MATERIALS

These tables show special tools and/or additional materials (not provided) which are necessary to complete installation of these units:

Special Tools		
Item	**Description**	**Quantity**
	NONE	

Additional Materials Not Included		
Item	**Description**	**Quantity**
1	Unplated copper inlet pipe	1
2	Service Stop	1
3	90° 1-1/4” Drain Line	1
4	1-1/4” Tee Drain Line	1

1. **Make** water supply connections (Fig. 10). Install a shut-off valve and union connection to building water supply (valve and union not provided). Turn on water supply and flush the line thoroughly.

   Caution: DO NOT SOLDER tubes inserted into the strainer or filter head as damage to the o-rings may result.

2. **Install** mounting frame (instructions supplied with mounting frame.

3. **(For HTHBWF-HRFSEBP-I)** Install the filter head to the bracket, then install filter bracket on mounting frame (Fig. 8), plumb from the filter outlet using the ¼” elbow, poly tubing and ¼ x ¼ x ⅜” tee, install filter (Fig. 3).

3a. **(For HTHB-HRFSEBP-I)** Install ⅜” tee, poly tubing and strainer per (Fig. 2).

4. **Install** supplied 4” poly tubing and armaflex to the outlet of the previously installed tee or strainer. Connect supplied ¼ x ¼ x ¼ tee to the 4” poly tubing. With the back panel standing close to the frame, connect 3/8” poly tube to the bottle filler.

5. **Hang** main panel on mounting frame hanger. Make sure the power cord, reset switch wire & poly tube do not get pinched between the panel & mounting frame. Ensure the panel engages at the top. Align fountain holes with mounting frame holes.

6. **Remove** protective coating from main panel.

7. **Install** reset switch for bottle filler (Fig. 5). Snap the switch into position after locating wires through slot. Wrap up the excess cord.

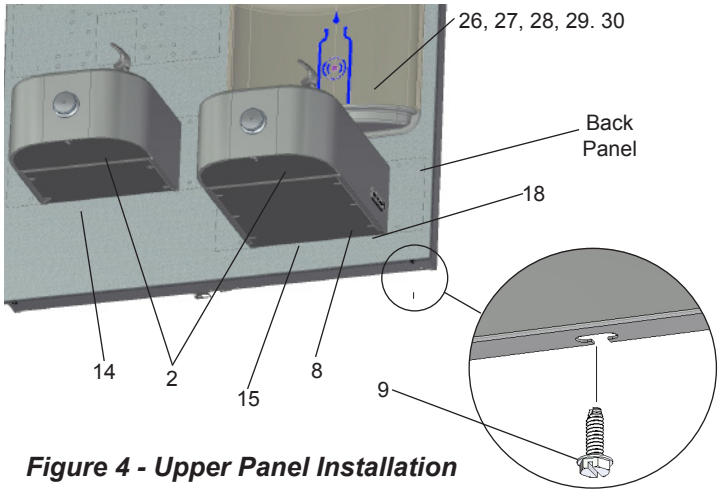

Figure 4 - Upper Panel Installation

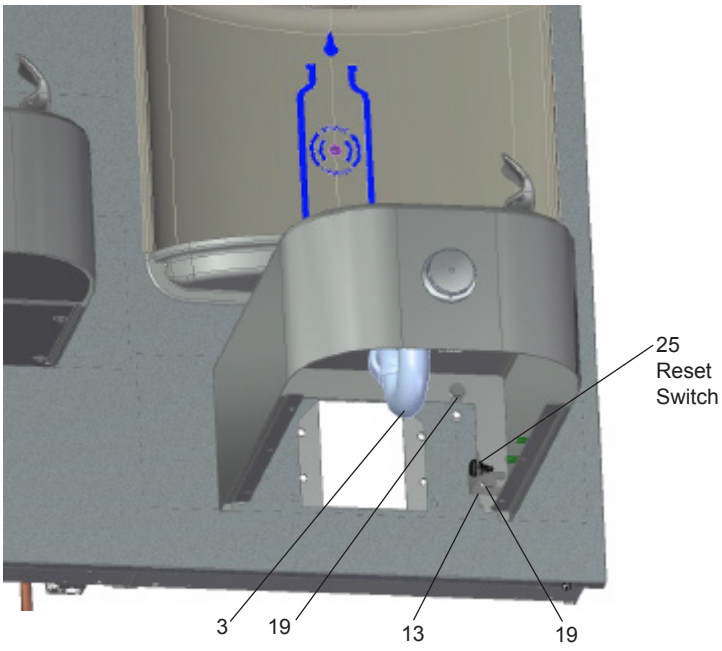

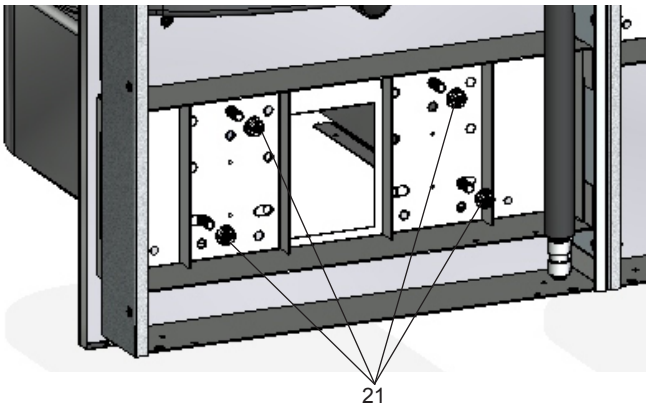

View From Rear

Figure 5 - Fountain Installation

8. **Install** fountains with (8) 5/16-18 HHMS & (8) 5/16-18 nuts (provided) (Fig. 5). Connect the ¼" water lines from each fountain to the remaining openings on the tee at the remote chiller (cut lines to fit as needed).

9. **Attach** waste tubes (1-1/4" O.D.) to 1-1/4" O.D. slip trap. Trap on the bottle filler side must be 1-1/2" O.D. (provided by others).

10. **Make** final water supply connections.

11. **These** products are designed to operate on 20-105 PSI supply line pressure. If inlet pressure is above 105 PSI, a pressure regulator must be installed in the supply line.

    Caution: Any damage caused by connecting these products to a supply line with pressure lower than 20 PSI or higher than 105 PSI IS NOT covered under warranty.

12. **Make** electrical connections to the bottle filler and remote chiller. The LCD Bottle counter should illuminate.

13. **Verify** proper dispensing from the bottle filler by placing a cup, hand or any opaque object in front of sensor area and verify water dispenses. Note: the first initial dispenses might have air in the line which may cause a sputter. This will be eliminated once all air is purged from the line. A steady stream of water assures all air is removed. The sensor has a 20 second maxi mum ON time. It may be necessary to step away from the beam a few times to purge all air. Check for leaks.

14. **Check** stream height from bubbler. Stream height is factory set for 35 PSI supply. If supply pressure varies greatly from this, remove push button (Item 5 - Fig. 6) and adjust the screw on the regulator (Item 4 - Fig. 6). To remove push button, remove setscrew from bottom of sleeve (Item 6). Insert a small punch in screw hole and push up while grasping the push but ton and pull forward removing the push button. Clockwise adjustment will raise stream height and counterclockwise movement will lower stream height. For best adjustment stream should hit basin approximately 6-1/2" from the bubbler. Reassemble the push button by pushing in on button until the push button catches in the sleeve. Reinstall the setscrew (Item 7) in the sleeve (Item 6).

15. **Install** the bottom cover plates on fountains (Fig. 4).

16. **Tighten** back panel screws (Fig. 4).

17. **Optional:** Mount optional panels. Mount bracket on wall per rough-in instructions. Slide tongue of panel under edge of already installed panel. Tighten screws.

NOTE: Danger! electrical shock hazard. Disconnect power before servicing unit.

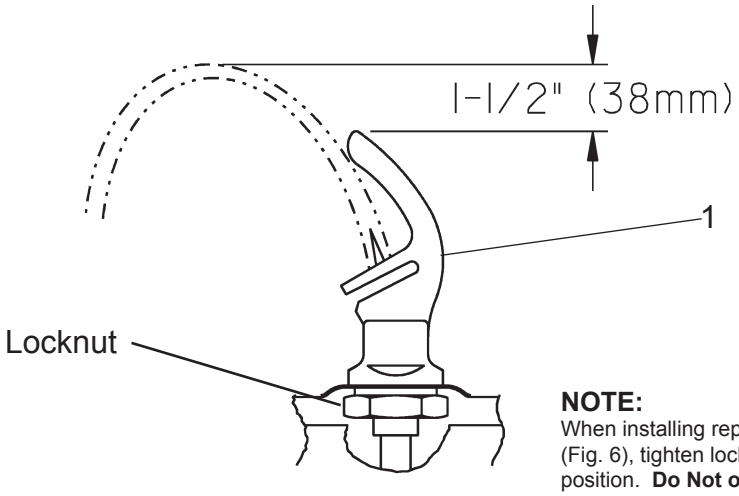

NOTE:
When installing replacement bubbler and pedestal (Fig. 6), tighten locknut only to hold parts snug in position. **Do Not overtighten.**

Figure 6 - Bubbler Detail

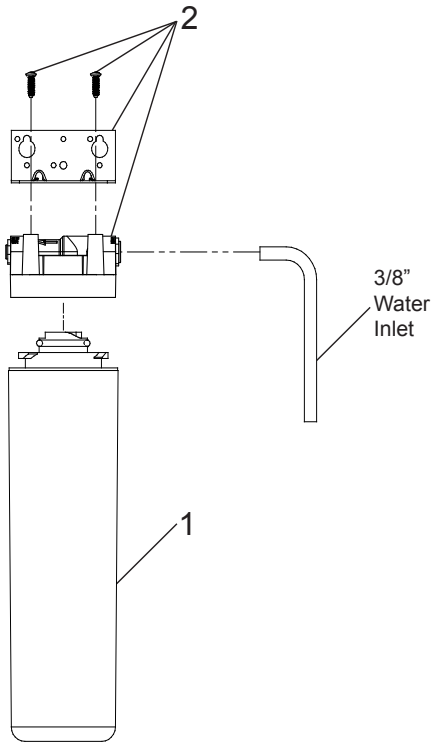

Fig. 7

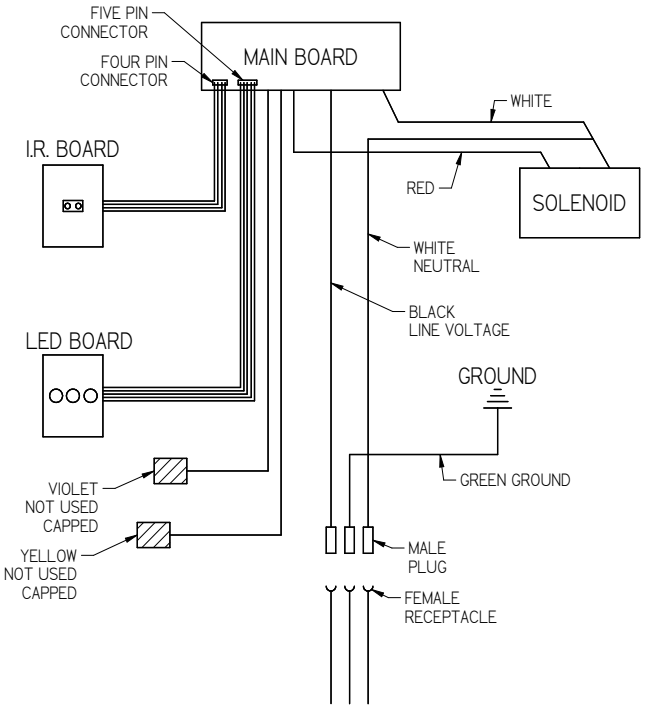

Electrical Diagram

WATERSENTRY® PLUS FILTER PARTS LIST (See Fig. 7)		
ITEM NO.	PART NO.	DESCRIPTION
1	55898C	Filter Assy-3000 Gal.
2	0000000746	Assy-Filter & Brkt includes Fltr Head/Mtg Bkt/ John Guest Fittings/Screws

Scan for troubleshooting information and to subscribe to automatic filter replacements at a discount.

BF11 - BF12 PROGRAM
SETTING THE CONTROL BOARD

VERIFY CONTROL BOARD SOFTWARE

1) To verify the software program of the control board the unit will need to be shut down and restarted. The chiller (if present) does not need to be shut down and restarted.
2) Shut down the unit by unplugging the power cord from the wall outlet or switching off the circuit breaker to the unit.
3) Restart the unit by plugging the power cord back into the wall outlet or by switching on the circuit breaker to the unit.
4) Upon start up, the bottle count display will show the software designation of BF11 or BF12.

ACCESSING THE PROGRAMMING BUTTON

1) To access the program button, remove the bottom cover on lower fountain arm (Fig. 5) by removing the bottom cover screws. Reset button is located on mounting bracket.

RESET THE FILTER MONITOR

1) Instructions apply to filtered units only.
2) Depress the program button for approximately 2 seconds until the display changes then release. The display will change and scroll through two messages:
   "RST FLTR" – Reset Filter Monitor
   "SETTINGS" – System Settings Sub Menu
   If the program button is not pushed again the display will scroll through the two messages above for three cycles and then default back to bottle count and be back in run mode.
3) When the display changes to "RST FLTR", depress the button again. The display will change to show "FLTR =". Depress the button again and the display will show "FLTR =0"
4) The Green LED should be illuminated indicating that the visual filter monitor has been reset.

SETTING RANGE OF THE IR SENSOR WHERE APPLICABLE

1) Depress the program button for approximately 2 seconds until the display changes then release. The display will change and scroll through two messages:
   "RST FLTR" – Reset Filter Status LED
   "SETTINGS" – System Settings Sub Menu
   If the program button is not pushed again the display will scroll through the two messages above for three cycles and then default back to bottle count and be back in run mode.
2) When the display changes to "SETTINGS", depress the button again. The display will change to show
   "RNG SET" - Range set for IR sensor.
   "UNIT TYP" - Type of unit (REFRIG or NON-RFRG)
   "FLT SIZE" - Select filter capacity
   "RST BCNT" - Reset bottle count
3) When display shows "RNG SET" push program button once the display will show current value (can be 1 – 10) e.g. "RNG = 3".
4) Once display shows current value push the program button to scroll through value of 1 – 10. Select the desired range setting, "1" being closest to sensor and "10" being farthest away.
5) Once range is selected allow approximately 4 seconds to pass and then the display will go back to bottle counter and be in run mode.
6) Test bottle filler by placing bottle or hand in front of sensor to make sure water is dispensed.

SETTING UNIT TYPE

1) Depress the program button for approximately 2 seconds until the display changes then release. The display will change and scroll through two messages:
   "RST FLTR" – Reset Filter Status LED
   "SETTINGS" – System Settings Sub Menu
   If the program button is not pushed again the display will scroll through the two messages above for three cycles and then default back to bottle count and be back in run mode.
2) When the display changes to "SETTINGS", depress the button again.
   The display will change to show
   "RNG SET" - Range set for IR sensor.
   "UNIT TYP" - Type of unit (REFRIG or NON-RFRG)
   "FLT SIZE" - Select filter capacity
   "RST BCNT" - Reset bottle count

Continued from below:

3) When display shows "UNIT TYPE" push program button once the display will show current value. Can be REFRIG or NON-RFRG
4) Push button once to change value. Once value is selected the display will show the new value. (Can be REFRIG or NON-RFRG)
   "REFRIG" - stands for refrigerated product. In this setting the flow rate is estimated at 1.0 gallon per minute.
   "NON-RFRG" - stands for nonrefrigerated product. In this setting the flow rate is estimated at 1.5 gallons per minute. Both "REFRIG" and "NON-RFRG" simulate 1 bottle equal to 20 oz.
5) Allow approximately 4 seconds to pass and the display will return to bottle counter and be in run mode.

RESETTING BOTTLE COUNT

1) Depress the program button for approximately 2 seconds until the display changes then release. The display will change and scroll through two messages:
   "RST FLTR" – Reset Filter Status LED
   "SETTINGS" – System Settings Sub Menu
   If the program button is not pushed again the display will scroll through the two messages above for three cycles and then default back to bottle count and be back in run mode.
2) When the display changes to "SETTINGS", depress the button again. The display will change to show:
   "RNG SET"- Range set for IR sensor.
   "UNIT TYP" - Type of unit (REFRIG or NON-RFRG)
   "FLT SIZE" - Select filter capacity
   "RST BCNT" - Reset bottle count
   If the button is not pushed again the display will scroll through the four messages above for three cycles and return to run mode.
3) When display shows "RST BCNT" push program button once the display will show current value, e.g. "0033183".
4) Once display shows current value push the program button once more to reset back to 0. The display will show BTLCT = 0 for approximately 2 seconds and then return to run mode showing 00000000 bottles.
   NOTE: Once the bottle count is reset to zero there is no way to return to the previous bottle count.
5) Testing the bottle counter:
   REFRIG units: Place bottle or hand in front of sensor for approximately 9 seconds to see bottle counter count 00000001,
   (This is based on filling a 20 oz. bottle).
   NON-RFRG units: Place bottle or hand in front of sensor for approximately 6 seconds to see bottle counter count 00000001,
   (This is based on filling a 20 oz bottle).

SETTING FILTER CAPACITY

1) Depress the program button for approximately 2 seconds until the display changes then release. The display will change and scroll through two messages:
   "RST FLTR" – Reset Filter Status LED
   "SETTINGS" – System Settings Sub Menu
   If the program button is not pushed again the display will scroll through the two messages above for three cycles and then default back to bottle count and be back in run mode.
2) When the display changes to "SETTINGS", depress the button again. The display will change to show:
   "RNG SET"- Range set for IR sensor.
   "UNIT TYP" - Type of unit (REFRIG or NON-RFRG)
   "FLT SIZE" - Select filter capacity
   "RST BCNT" - Reset bottle count
   If the button is not pushed again the display will scroll through the four messages above for three cycles and return to run mode.
3) When display shows "FLT SIZE" push program button once. The display will show current value. Can be 3000GAL or 6000GAL.
4) Push program button again to display the desired "FLT SIZE".
5) Allow approximately 4 seconds to pass and the display will return to bottle counter and be in run mode.

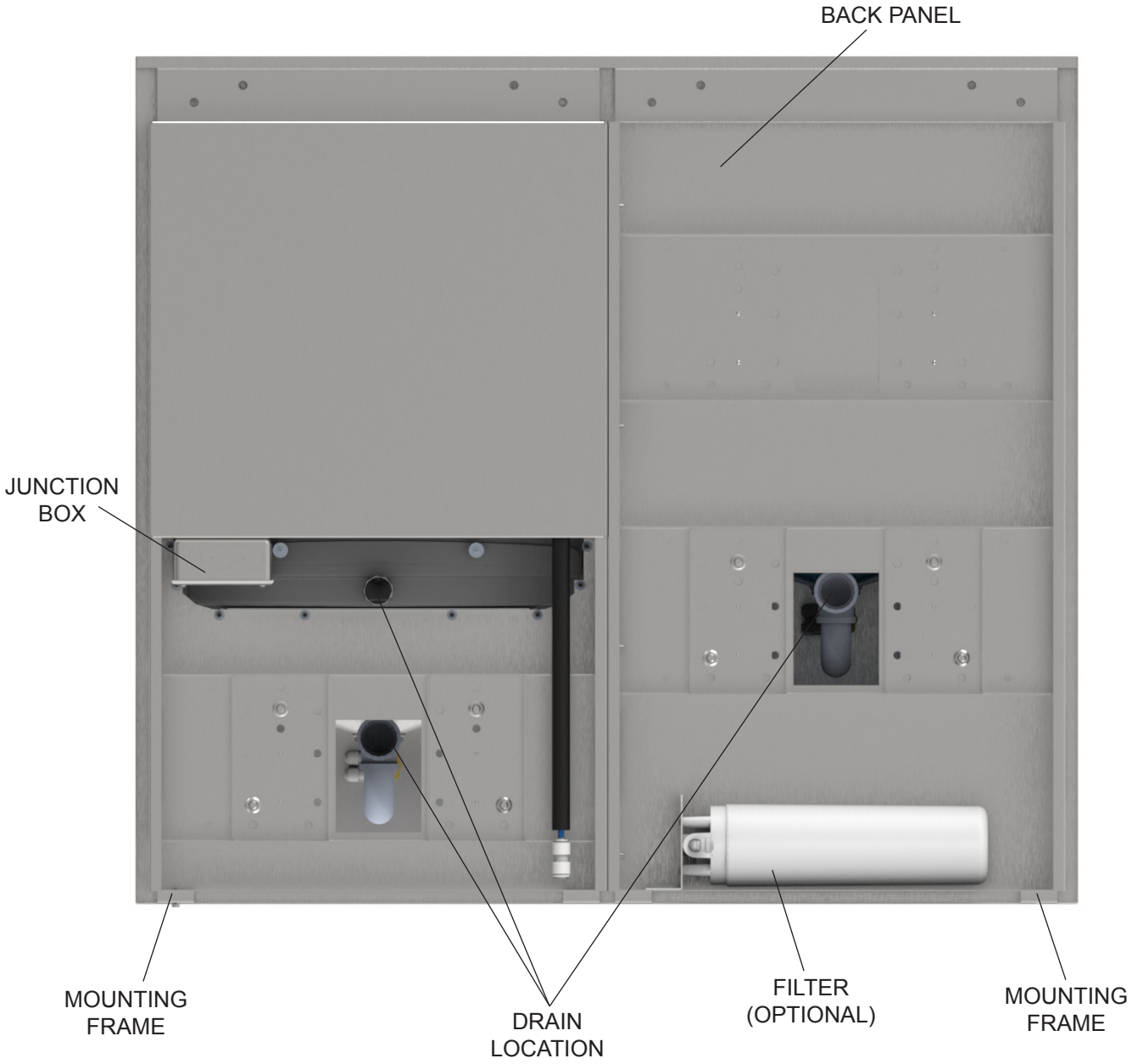

Figure 8

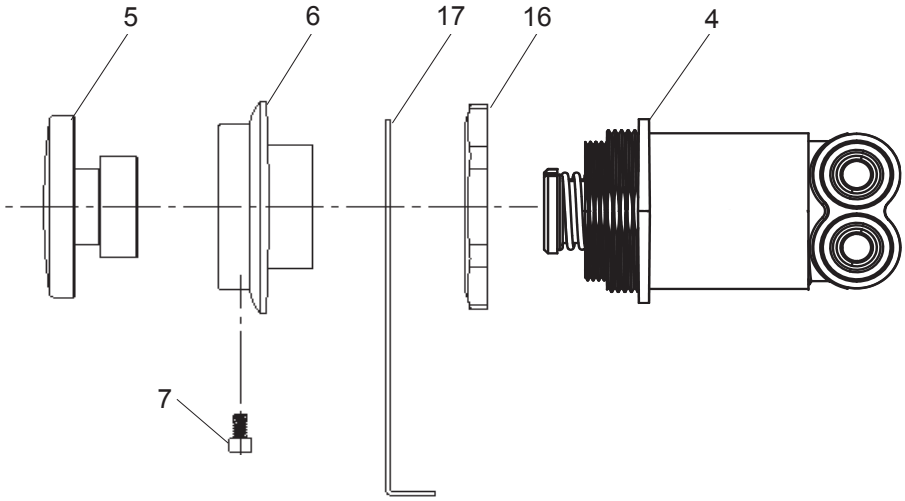

Figure 9

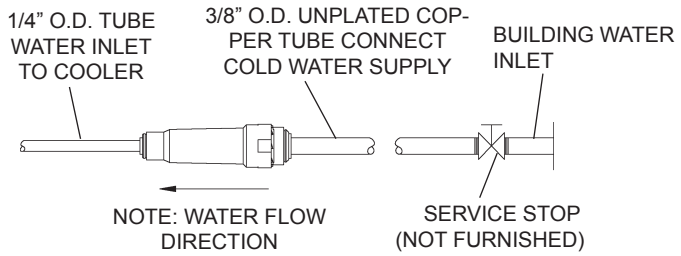

Figure 10 – Water Supply Connections

PARTS LIST		
ITEM NO.	PART NO.	DESCRIPTION
1	98533C	Kit - Double Bubbler Assy
2	55000604	Fountain Arm - Short
	55000612	Fountain Arm - Long
3	LK464	Drain
4	98530C	Kit - Regulator Assembly
5	45662C	Push Button
6	45663C	Push Button Sleeve
7	75672C	Screw - Cap #6-32 x 5/16
8	112627543890	Screw - #10-24 x .50 PHTC
9	111008343890	Screw - #10-24 x .62 HHSM
10	56092C	Poly Tubing 1/4" (Cut To Length)
11	1000001994	Kit - Tee 1/4 x 1/4 x 1/4 (3 Pack)
12	55996C	Strainer
13	0000001153	Reset Switch Bracket
14	55000661	Bottom Cover Plate - Short
15	55000665	Bottom Cover Plate - Long
16	40045C	Hex Nut
17	28823C	Regulator Mounting Bracket
18	56280C	Edge Trim - Chrome
19	75560C	Screw - 5/16-18 x 1.00 HHMS
20	1000001772	Kit - Fitting Elbow 1/4 x 1/4 (3 Pack)
21	111577343890	Nut - Hex 5/16-18
22	70852C	Tee - 3/8 x 3/8 x 3/8
23	62223C	Copper Tube 3/8" Cut To Length
24	1000002062	Kit - Tee 1/4 x 1/4 x 3/8 (3 Pack)
25	99003C	Reset Switch Assy

BOTTLE FILLER REPLACEMENT PART KITS		
ITEM NO.	PART NO.	DESCRIPTION
26	98543C	Kit - Electrical Package
27	98544C	Kit - EE Sensor
28	2000000503	Kit - Bottle Filler Solenoid Valve 115V
29	98546C	Kit - Aerator Replacement
30	98549C	Kit - Hardware & Waterway Parts

Installation Package

The components for installation are packed in two separate boxes, regardless of the type of unit being installed. The boxes contain the following:

Box No. 1: Wall Frame(s)
Box No. 2: Fountain(s), Arm(s) and Panels

Additional materials, as noted in the Parts List, are also shipped in these boxes.

TROUBLESHOOTING & MAINTENANCE

Orifice Assembly: Mineral deposits on orifice can cause water flow to spurt or not regulate. Mineral deposits may be removed from the orifice by poking with a small round file not over 1/8" diameter, or using a small diameter wire.

CAUTION: DO NOT file or cut orifice material

Stream Regulator: If orifice is clean, regulate flow as in Step 14 of the installation instructions. If replacement is necessary, see parts list for correct regulator part number.

Actuation of Quick Connect Water Fittings: Cooler is provided with lead-free connectors which utilize an o-ring water seal. To remove tubing from the fitting, relieve water pressure, push in on the gray collar while pulling on the tubing. (See Fig. 11) To insert tubing, push tube straight into fitting until it reaches a positive stop (approximately 3/4").

OPERATION OF QUICK CONNECT FITTINGS

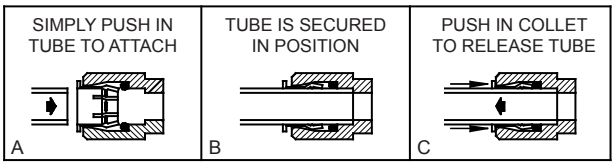

PUSHING TUBE IN BEFORE PULLING IT OUT HELPS TO RELEASE TUBE

Figure 11 – Quick Connect Fittings

0000001031

Patent zurnelkay.com/patents

Halsey Taylor®
1333 BUTTERFIELD ROAD SUITE 200
DOWNERS GROVE, IL 60515
U.S.A 630.574.3500
www.halseytaylor.com

PRINTED IN U.S.A.

FOR PARTS CONTACT YOUR LOCAL DISTRIBUTOR OR CALL 1.800.834.4816
REPAIR SERVICE INFORMATION TOLL FREE NUMBER 1.800.260.6640