ELKAY®

INSTALLATION, CARE & USE MANUAL

Manual de Instalación, Cuidado y Utilización
Manuel d'installation/entretien/utilisation

EMABF8TL & LMABF8TL Series Bottle Filling Stations & Coolers

EMABF8TL & LMABF8TL Serie Botella Bombas y Enfriadores
EMABF8TL & LMABF8TL Stations de Remplissage de Bouteille Série et Refroidisseurs

1000001718 (Rev. R - 04/26)

Note: Danger! Electric shock hazard. Disconnect power before servicing unit.
Nota: peligro! Peligro de descarga eléctrica. Desconecte antes de reparar la unidad.
Remarque : Danger ! Risque d'électrocution. Débrancher avant de réparer l'appareil.

Pictured is unit only without bottle filler.

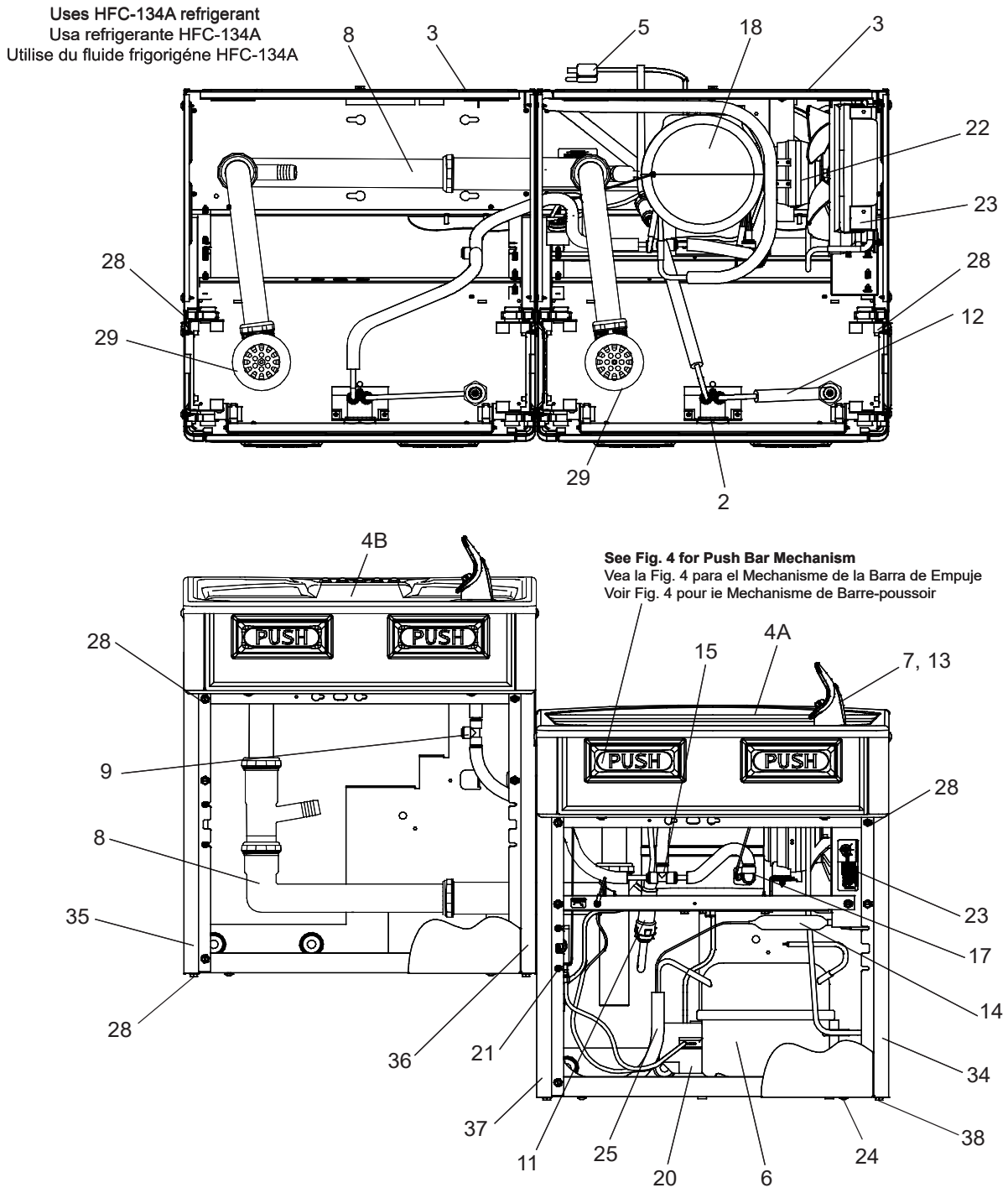

Fig.1

NOTE: Non-refrigerated units do not include all electrical and refrigeration components shown above. Other components and rough-in are the same as shown.
NOTA: Las unidades no frigorificadas no incluyen todos los componentes eléctricos y de la refrigeración demostrados arriba. Otros componentes y a'spero-en son iguales según lo demostrado.
NOTE: Les unités non frigorifiées n'incluent pas tous les composants électriques et de réfrigération montrés ci-dessus. D'autres composants et rugueux-dans sont identiques que montrés.

Note: Danger! Electric shock hazard. Disconnect power before servicing unit.

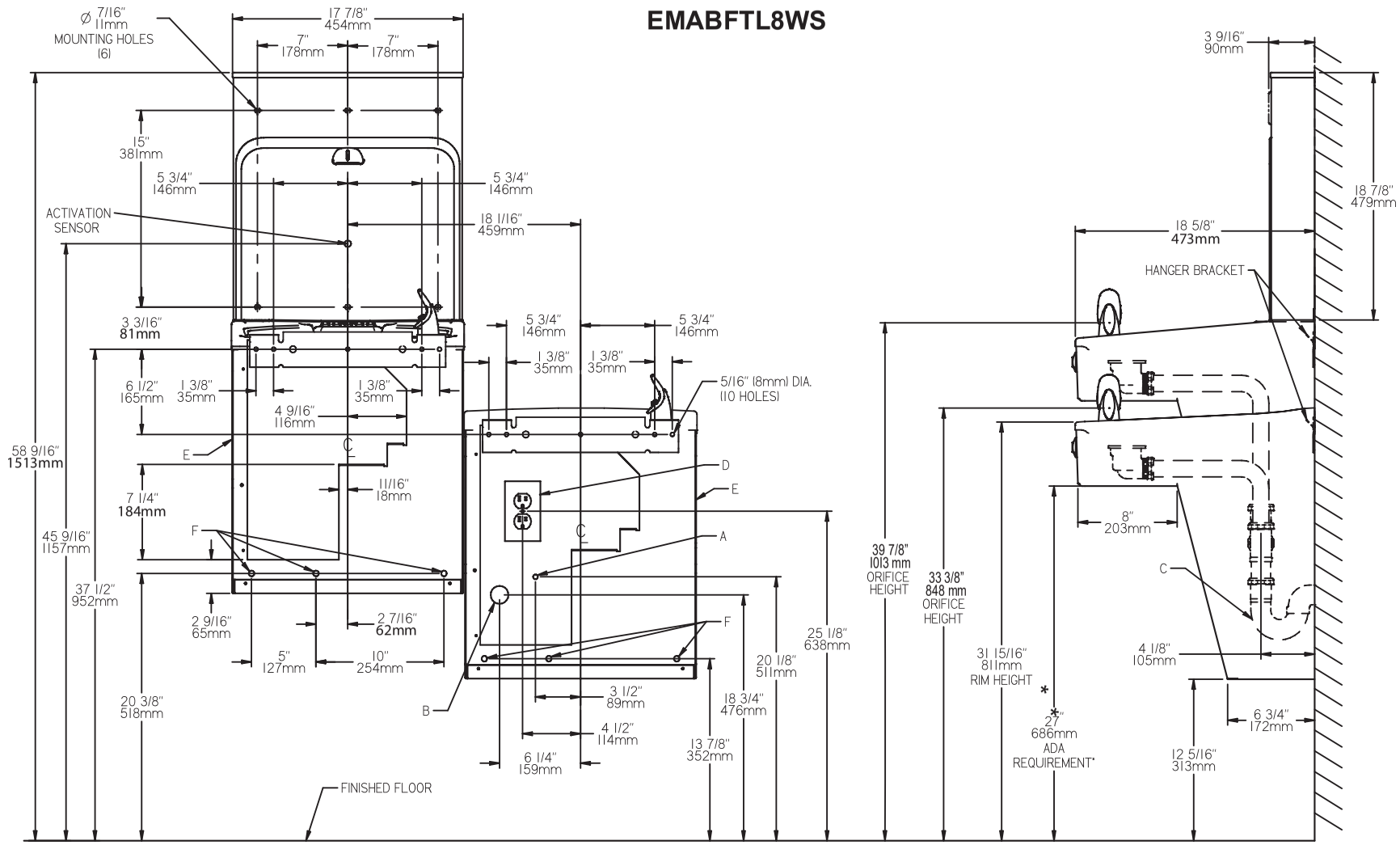

***REDUCE HEIGHT BY 3" FOR INSTALLATION OF CHILDREN'S ADA COOLER**

***ADA REQUIREMENT**
***REQUISITO DE A.D.A.**
***EXIGENCE ADA**

LEGEND/LEYENDA/LÉGENDE

A = RECOMMENDED WATER SUPPLY LOCATION 3/8 O.D. UNPLATED COPPER TUBE CONNECT STUB WITH SHUT OFF (BY OTHERS) 3 IN. (76mm) MAXIMUM OUT FROM WALL. MAXIMUM WATER SUPPLY PRESSURE: 105 PSI (0.73 MPa).
La UBICACION 3/8 O RECOMENDADA de ABASTECIMIENTO DE AGUA. D. EI TUBO del COBRE de UNPLATED CONECTA TALONARIO CON APAGO (POR OTROS) 3 en. (76 Mm) el MAXIMO FUERA DE PARED. PRESIÓN MÁXIMA DE SUMINISTRO DE AGUA: 105 PSI (0.73 MPa).
L'O.D de 3/8 d'EMPLACEMENT DE PROVISION D'EAU RECOMMANDE. LE TUBE DE CUIVRE DE UNPLATED CONNECTE STUB AVEC ETEINT (PAR LES AUTRES) 3 dans. (76 mm) le MAXIMUM HORS DU MUR. PRESSION MAXIMALE D'ALIMENTATION EN EAU : 105 PSI (0.73 MPa).

B = RECOMMENDED LOCATION FOR WASTE OUTLET 1-1/2" O.D. DRAIN STUB 2 IN. OUT FROM WALL
UBICACIÓN RECOMENDADA PARA EL DRENAJE DE SALIDA DE AGUA, DE 1-1/2" DE DIÁMETRO. EI TALONARIO 2 FUERA DE PARED
EMPLACEMENT RECOMMANDÉ POUR LE DRAIN DE D.E. 1-1/2" DE SORTIE D'EAU. STUB 2 HORS DU MUR

C = 1-1/2" TRAP NOT FURNISHED
PURGADOR DE 1-1/2" NO PROPORCIONADO
SIPHON 1-1/2" NON FOURNI

LEGEND/LEYENDA/LÉGENDE

D = ELECTRICAL SUPPLY (3) WIRE RECESSED BOX DUPLEX OUTLET**
SUMINISTRO ELÉCTRICO (3) CAJA ENCHUFE DE ALAMBRE SALIDA DÚPLEX
ALIMENTATION ÉLECTRIQUE (3) BOÎTIER ENCASTRÉ

E = INSURE PROPER VENTILATION BY MAINTAINING 6" (152 mm) (MIN.) CLEARANCE FROM CABINET LOUVERS TO WALL.
ASEGURE UNA VENTILACIÓN ADECUADA MANTENIENDO UN ESPACIO E 6" (152 mm) (MÍN.) DE HOLGURA ENTRE LA REJILLA DE VENTILACIÓN DEL MUEBLE Y LA PARED.
ASSUREZ-VOUS UNE BONNE VENTILATION EN GARDANT 6" (152 mm) (MIN.) ENTRE LES ÉVENTS DE L'ENCEINTE ET LE MUR.

F = 7/16 BOLT HOLES FOR FASTENING UNIT TO WALL
AGUJEROS DE LAS TUERCAS DE 7/16 PARA SUJETAR LA UNIDAD A LA PARED
TROUS D'ÉCROUS 7/16 POUR FIXER L'APPAREIL AU MUR

****NEW INSTALLATIONS MUST USE GROUND FAULT CIRCUIT INTERRUPTER (GFCI)**
****Las nuevas instalaciones deben utilizar el interruptor de circuito de tierra de la avería (GFCI)**
****Les nouvelles installations doivent employer l'interrupteur de circuit moulu de défaut (GFCI)**

Fig. 2

IMPORTANT
ALL SERVICE TO BE PERFORMED BY AN AUTHORIZED SERVICE PERSON

HANGER BRACKETS & TRAP INSTALLATION

1) Remove hanger bracket fastened to back of cooler by removing one (1) screw.
2) Mount the hanger bracket and trap as shown in Figure 2.

NOTE: Hanger Bracket MUST be supported securely. Add fixture support carrier if wall will not provide adequate support.

IMPORTANT:

- 4 1/8 in. (105mm) dimension from wall to centerline of trap must be maintained for proper fit.
- Anchor hanger securely to wall using all five (5) 7/16" dia. mounting holes.

3) Install straight valve for 3/8" O.D. tube.

INSTALLATION OF COOLER

4) Hang the cooler on the hanger bracket. Be certain the hanger bracket is engaged properly in the slots on the cooler back as shown in Fig. 4.
5) Loosen the two (2) screws holding the lower front panel at the bottom of cooler base and two (2) screws at the top. Remove the front panel and set aside.
6) Connect water inlet line--See Note 4 of General Instructions.
7) Remove the slip nut and gasket from the trap and install them on the cooler waste line making sure that the end of the waste line fits into the trap. Assemble the slip nut and gasket to the trap and tighten securely.

START UP

Also See General Instructions

8) Stream height is factory set for 45-50 PSI supply. If supply pressure varies greatly from this, adjust screw, accessible by removing front push panel (Item 35 , Fig. 4). CW adjustment will raise stream and CCW adjustment will lower stream. For best adjustment, stream should hit basin approximately 6-1/2" (165mm) from bubbler.
9) Replace the front panel and secure by retightening four (4) screws.
10) If a taste, odor or sediment problem is prevalent, try installing our water filter module.

IMPORTANTE
TODO EL SERVICIO DEBERÁ SER EFECTUADO POR UNA PERSONA DE SERVICIO AUTORIZADA

INSTALACIÓN DE FIJADOR DE SUSPENSIÓN Y DEL PURGADOR

1) Quite el fijador de suspensión sujetados a la parte posterior del enfriador quitando un (1) tornillo.
2) Monte el fijador de suspensión y quite el purgador como se muestra en la Fig. 2.

NOTA: El fijador de suspensión DEBE de ser sostenido con seguridad. Coloque portadores de soporte de instalaciones fijas si la pared no proveerá un soporte adecuado.

IMPORTANTE:

- Se debe mantener una dimensión de 4 1/8 pulgadas (105mm) desde la pared hasta la línea central del purgador para que calce de forma adecuada.
- Ancle el suspensor de forma segura a la pared usando todos los cinco (5) agujeros de montaje de 7/16" de diámetro.

3) Instale la válvula directa para el tubo de 3/8" de diámetro externo.

INSTALACIÓN DEL ENFRIADOR DE AGUA

4) Suspenda el enfriador en el fijador de suspensión. Asegúrese que el fijador de suspensión calce correctamente en las ranuras de la parte posterior del enfriador como se indica en la figura 4.
5) Afloje los dos (2) tornillos que sostienen la parte inferior del panel en la parte inferior de la base del enfriador y los dos (2) tornillos en la parte superior. Quite el panel frontal y póngalo a un lado.
6) Conectar el tubo de entrada de agua. Ver la Nota 4 en las Instrucciones Generales.
7) Quite la tuerca de retención y el obturador del purgador y instálelos en el tubo de desagüe asegurándose que la parte final del tubo de desagüe calce en el purgador. Ensamble la tuerca de la ranura y el obturador y apriete en forma segura.

PUESTA EN MARCHA

Vea Manual de los Instrucciones Generales

8) Altura del chorro viene configurado de fábrica para el suministro de 45-50 PSI. Si la presión del suministro varía demasiado de este valor, ajuste el tornillo, sacando el panel frontal de empuje (Artículo 35, Figura 4). El ajuste en el sentido de las manecillas del reloj elevará el chorro y contra el sentido de las manecillas del reloj lo bajará. Para un mejor juste, el chorro deberá pegar en el estanque a una distancia de aproximadamente 6½" (165mm) del borboteador.
9) Vuelva a colocar el panel frontal y asegúrelo apretando nuevamente los cuatro (4) tornillos.
10) Si se suscitara un problema de sabor, olor o sedimentación, trate de instalar nuestro módulo de filtro de agua.

IMPORTANT
TOUT ENTRETIEN DOIT ÊTRE EFFECTUÉ PAR UN REPRÉSENTANT AUTORISÉ

INSTALLATION DU SIPHON ET DU SUPPORT DE SUSPENSION

1) Retirez le support de suspension à l'arrière du refroidisseur en enlevant une (1) vis.
2) Installez le support et le siphon tel qu'indiqué à la fig. 2.

NOTE : Le support de suspension DOIT être bien retenu en place. Ajoutez des ferrures de fixation si le mur n'offre pas le soutien voulu.

IMPORTANT :

- Pour avoir une bonne position, on doit garder une dimension de 4 1/8 po. (105mm) du mur à l'axe central du siphon.
- Ancrez solidement le support au mur à l'aide des five (5) trous de fixation d'un diam. 7/16 po.

3) Installez la soupape droite dans le tuyau de D.E. 3/8".

INSTALLATION DU REFROIDISSEUR

4) Installez le refroidisseur sur les supports en vous assurant que ceux-ci sont bien installés dans les fentes à l'arrière du refroidisseur tel qu'indiqué à la figure 4.
5) Dégagez les deux (2) vis retenant le panneau inférieur avant au bas de la base du refroidisseur ainsi que deux (2) vis sur le dessus. Retirez le panneau avant et mettez-le de côté.
6) Connectez l'alimentation en eau. - Voir note 4 des instructions générales.
7) Retirez l'écrou coulissant et le joint du siphon et installez-les sur la conduite résiduaire du refroidisseur en vous assurant que le bout de la conduite entre bien dans le siphon. Installez l'écrou coulissant et le joint au siphon et resserrez bien.

MISE EN MARCHE

Voir Manuel de les Directives Generales

8) Hauteur de flux est réglé en usine pour la fourniture de 45 à 50 lb/po2. Si la pression varie beaucoup de ce point, ajustez la vis que l'on peut atteindre en retirant le panneau avant (article 35, fig. 4). Si vous ajustez dans le sens des aiguilles d'une montre, le jet augmentera et dans le sens contraire, le jet diminuera. Le meilleur ajustement est lorsque le jet frappe le bassin à environ 6-1/2" (165mm) du barboteur.
9) Replacez le panneau avant et fixez le en place en resserrant les quatre (4) vis.
10) S'il existe un problème de goût, d'odeur ou de sédiment, essayez d'installer notre module filtre d'eau.

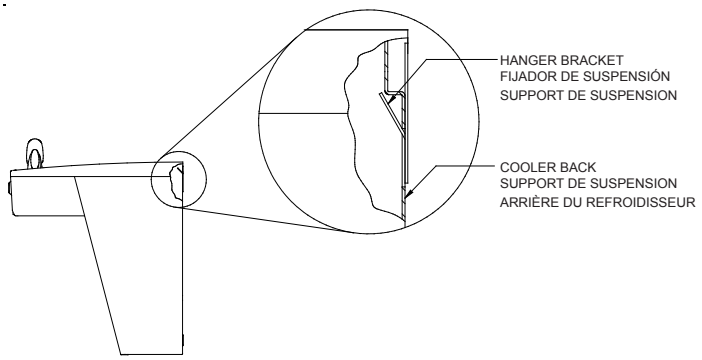

Fig. 3

PUSH BAR MECHANISM
MECANISMO DE BARRA DE EMPUJE
MÉCANISME DU BOUTON-POUSSOIR

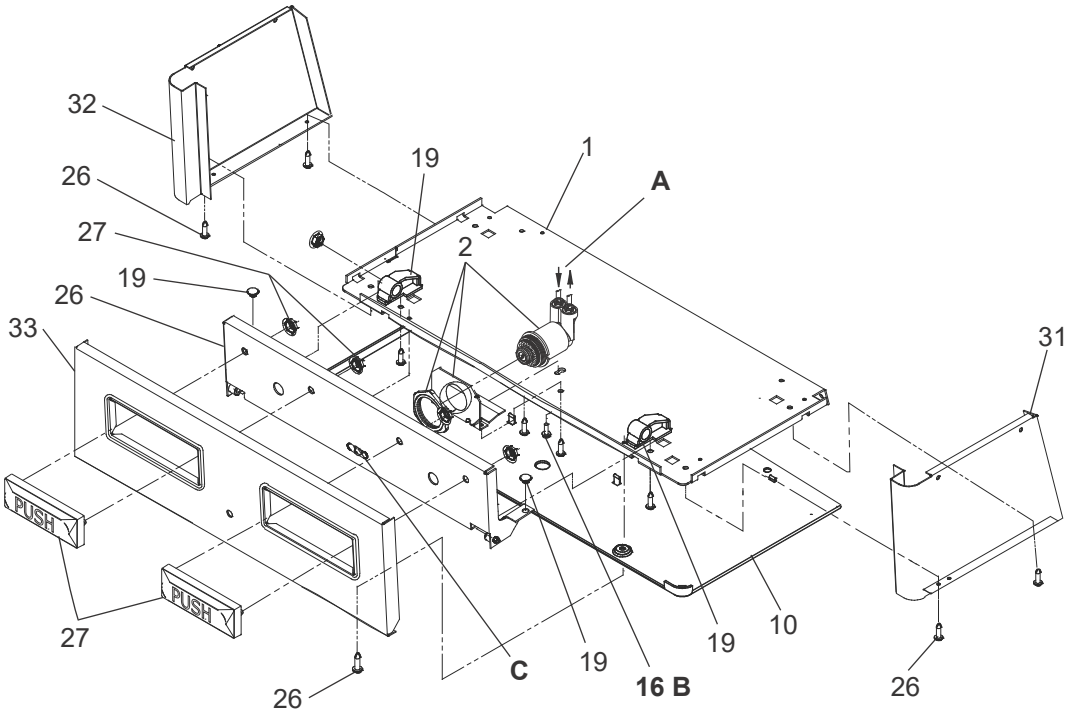

Fig. 4

Water Valve Mechanism - ADJUSTMENT PROCEDURE:
- Turn adjustment screw "Counter-Clockwise" until water flow from bubbler starts.
- Turn adjustment screw "Clockwise" until water flow stops, THEN turn an additional 1/2 turn.

NOTE: Adjustments stated above are viewed from underneath unit (bottom side of dispenser panel)

NOTE: If continuous flow occurs at the end of the compressor cycle, turn cold control counterclockwise 1/4 turn.

Mecanismo de la Válvula de Agua-PROCEDIMIENTO DE AJUSTE:
- Gire el tornillo de ajuste "en sentido contrario de las manecillas del reloj" hasta que comience el flujo de agua del borboteador.
- Gire el tornillo de ajuste "en el sentido de las manecillas del reloj" hasta que el flujo de agua se detenga, DESPUÉS gire una media vuelta adicional.

NOTA: Los ajustes especificados anteriormente son correctos viendo desde la parte de abajo de la unidad (parte inferior del panel del distribuidor).

NOTA: Si hay un flujo continuo al final del ciclo del compresor, girar el tornillo del control en contra del sentido de las agujas del reloj 1/4 de vuelta.

Mécanisme de soupape d'eau - PROCÉDURE DE RÉGLAGE :
- Tournez la vis de réglage dans le sens contraire aux aiguilles d'une montre jusqu'à ce que le débit d'eau du barboteur commence.
- Tournez la vis de réglage dans le sens des aiguilles d'une montre jusqu'à ce que le débit d'eau du barboteur s'arrête, PUIS tournez encore de 1/2 tour.

NOTE: Les ajustements sont décrits tels qu'on les voit d'en dessous de l'appareil (côté inférieur du panneau distributeur).

NOTE: S'il y a débit continu à la fin du cycle du compresseur, tournez la commande d'eau froide vers le côté gauche de 1/4 de tour.

LEGEND/LEYENDA/LÉGENDE

A) Note: Water flow direction
Nota: Dirección del flujo de agua
Note: Direction de l'eau

B) Adjust this screw to eliminate mechanism "Free Play" or continuous flow from bubbler conditions. (See ADJUSTMENT PROCEDURE)
Adjuste este tornillo para eliminar el mecanismo de "juego libre" o el flujo continuo del borboteador (vea PROCEDIMIENTO DE AJUSTE)
Ajustez cette vis pour éliminer tout "jeu" du mécanisme ou tout débit continu du barboteur (voir PROCÉDURE DE RÉGLAGE)

C) Stream height adjustment (see note #8)
Ajuste de la altura del chorro (vea la nota #8)
Ajustement de la hauteur du jet (voir la note #8)

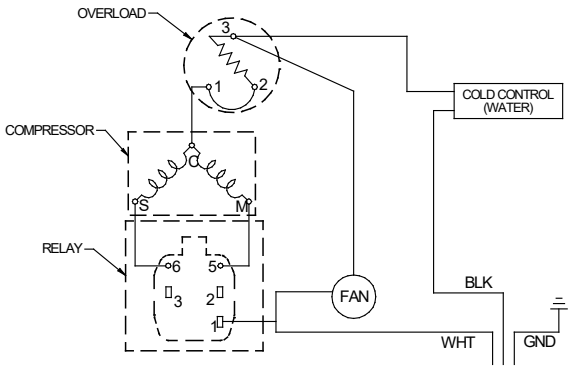

Fig. 5
115V Wiring Diagram
Diagrama de Cableado de 115 Voltios
Schéma de Câblage de 115 Volts

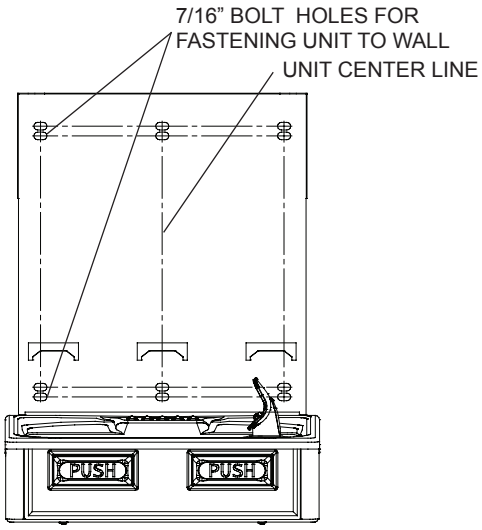

Fig. 6

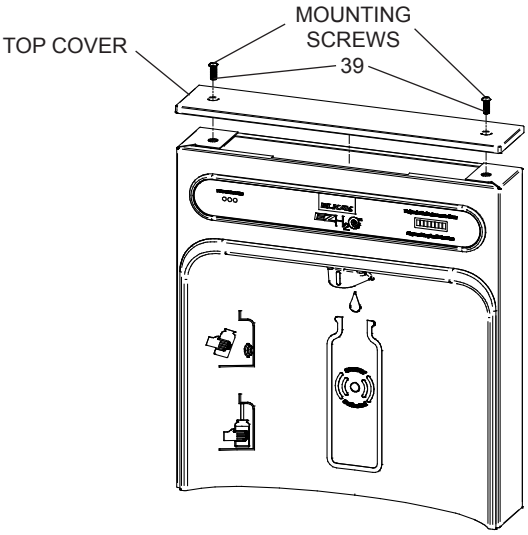

Fig. 7

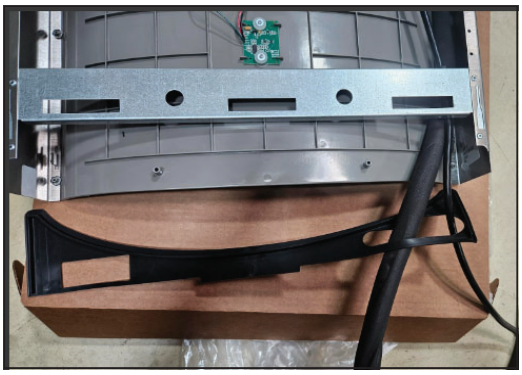

Fig. 8

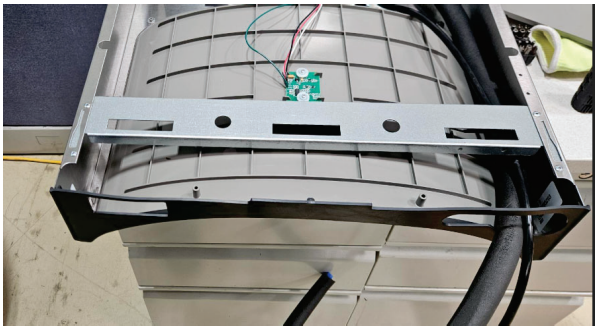

Fig. 9

Bottle Filler Installation Instructions

1) **Remove two (2) mounting screw**s with 5/32” Allen wrench holding top cover to Bottle Filler (See Fig. 9). Remove top cover. Note do not discard mounting screws, they will be needed to reinstall top cover.
2) **Remove wall mounting plate from Bottle Filler.** Place wall plate against wall on top of basin. Center the wall plate side to side with the basin. Mark the six (6) mounting holes with a pencil (See Fig. 6).
3) **Remove wall mounting plate from wall. NOTE**: Mounting plate **MUST** be supported securely. Add fixture support carrier if wall will not provide adequate support.
4) **Install wall mounting plate to wall** using six (6) 7/16” obround mounting holes (mounting bolts not included) (See Fig. 6). Use appropriate fasteners for your wall type.
5) **Feed power cord & 3/8” water line** through hole in tower/basin gasket (See Fig 8).
6) **Install gasket on the bottom of bottle filler tower** by pushing detents into place (See Fig 9).
7) **Lay Bottle Filler on water cooler basin** and cut insulation from tube even with bottom of gasket, remove this insulation from the 3/8” tube, but do not discard. Feed the power cord and waterline through the hole on top of water cooler. NOTE: To prevent scratching the basin place a towel or soft cloth over the entire basin when working above it.
8) **With the power cord and waterline through hole** on top of water cooler place Bottle Filler on the three (3) angled tabs protruding from the wall mounting plate installed on wall. Make sure round boss in gasket fits in hole of basin. (See Fig. 12).
9) **Once Bottle Filler is installed on wall plate tabs,** water line and power cord are installed properly, push top of Bottle Filler toward wall and line up top cover two (2) holes.
10) **Reinstall Top Cover on Bottle Filler** (See Fig. 7) with two mounting screws from step 1 above. Caution, do not over tighten screws.
11) **Install remaining tube insulation** to the water line from bottle filler, connect Bottle Filler waterline inside of the water cooler by connecting the 3/8” water line to the tee.
12) **Install filter cartridge,** remove filter from carton, remove protective cap, attach filter to filter head by firmly inserting into head and rotating filter clockwise. NOTE: If existing plumbing rough in locations (Drain, Water In, and Electric Supply) do not allow the filter to be mounted inside the cooler cabinet the filter can be installed horizontally below the unit. A retrofit kit is available to mount the filter beneath the cooler.
13) **Turn water supply on** and inspect for leaks. Fix all leaks before continuing.
14) **Once unit has been inspected for leaks** and any leaks found corrected, plug Bottle Filler and unit into wall. Be sure to reinstall fuse to the circuit or switch the circuit breaker back to the “ON” position.
15) **Once power is applied to Bottle Filler**, the GREEN LED light should illuminate showing good filter status along with the LCD Bottle Counter.
16) **Verify proper dispensing by placing cup,** hand, or any opaque object in front of sensor area and verify water dispenses. Note: the first initial dispenses might have air in line which may cause a sputter. This will be eliminated once all air is purged from the line.
17) **Once unit tests out,** install Lower Panel back on water cooler(s). Unit is now ready for use.

BF11 - BF12 PROGRAM
SETTING THE CONTROL BOARD

VERIFY CONTROL BOARD SOFTWARE

1) To verify the software program of the control board the unit will need to be shut down and restarted. The chiller (if present) does not need to be shut down and restarted.
2) The units lower panel must be open to access the power cord and wall outlet.
3) Shut down the unit by unplugging the power cord from the wall outlet.
4) Restart the unit by plugging the power cord back into the wall outlet.
5) Upon start up, the bottle count display will show the software designation of BF11 or BF12.

ACCESSING THE PROGRAMMING BUTTON

1) To access the program button, remove the top cover of the bottle-filler. Remove the two (2) screws holding top cover to bottle-filler with a 5/32" allen wrench. Remove top cover. Do not discard mounting screws, they will be needed to reinstall the top cove after programming operations are completed. The programming button is located at the top right side of the unit on the control board.
NOTE: When applicable, there is also an alternate reset button located on the lower part of the water cooler. After removing the bottom cover, the reset button will be located on the left side of the cooler, mounted on the side panel support.

RESET THE FILTER MONITOR

1) Instructions apply to filtered units only.
2) Depress the program button for approximately 2 seconds until the display changes then release. The display will change and scroll through two messages:
"RST FLTR" – Reset Filter Monitor
"SETTINGS" – System Settings Sub Menu
If the program button is not pushed again the display will scroll through the two messages above for three cycles and then default back to bottle count and be back in run mode.
3) When the display changes to "RST FLTR", depress the button again. The display will change to show "FLTR =". Depress the button again and the display will show "FLTR =0"
4) The Green LED should be illuminated indicating that the visual filter monitor has been reset.

SETTING RANGE OF THE IR SENSOR WHERE APPLICABLE

1) Depress the program button for approximately 2 seconds until the display changes then release. The display will change and scroll through two messages:
"RST FLTR" – Reset Filter Status LED
"SETTINGS" – System Settings Sub Menu
If the program button is not pushed again the display will scroll through the two messages above for three cycles and then default back to bottle count and be back in run mode.
2) When the display changes to "SETTINGS", depress the button again. The display will change to show
"RNG SET" - Range set for IR sensor.
"UNIT TYP" - Type of unit (REFRIG or NON-RFRG)
"FLT SIZE" - Select filter capacity
"RST BCNT" - Reset bottle count
3) When display shows "RNG SET" push program button once the display will show current value (can be 1 – 10) e.g. "RNG = 3".
4) Once display shows current value push the program button to scroll through value of 1 – 10. Select the desired range setting, "1" being closest to sensor and "10" being farthest away.
5) Once range is selected allow approximately 4 seconds to pass and then the display will go back to bottle counter and be in run mode.
6) Test bottle filler by placing bottle or hand in front of sensor to make sure water is dispensed.

SETTING UNIT TYPE

1) Depress the program button for approximately 2 seconds until the display changes then release. The display will change and scroll through two messages:
"RST FLTR" – Reset Filter Status LED
"SETTINGS" – System Settings Sub Menu
If the program button is not pushed again the display will scroll through the two messages above for three cycles and then default back to bottle count and be back in run mode.

Continued from below:

2) When the display changes to "SETTINGS", depress the button again. The display will change to show
"RNG SET" - Range set for IR sensor.
"UNIT TYP" - Type of unit (REFRIG or NON-RFRG)
"FLT SIZE" - Select filter capacity
"RST BCNT" - Reset bottle count
3) When display shows "UNIT TYPE" push program button once the display will show current value. Can be REFRIG or NON-RFRG
4) Push button once to change value. Once value is selected the display will show the new value. (Can be REFRIG or NON-RFRG)
"REFRIG" - stands for refrigerated product. In this setting the flow rate is estimated at 1.0 gallon per minute.
"NON-RFRG" - stands for nonrefrigerated product. In this setting the flow rate is estimated at 1.5 gallons per minute. Both "REFRIG" and "NON-RFRG" simulate 1 bottle equal to 20 oz.
5) Allow approximately 4 seconds to pass and the display will return to bottle counter and be in run mode.

RESETTING BOTTLE COUNT

1) Depress the program button for approximately 2 seconds until the display changes then release. The display will change and scroll through two messages:
"RST FLTR" – Reset Filter Status LED
"SETTINGS" – System Settings Sub Menu
If the program button is not pushed again the display will scroll through the two messages above for three cycles and then default back to bottle count and be back in run mode.
2) When the display changes to "SETTINGS", depress the button again. The display will change to show:
"RNG SET"- Range set for IR sensor.
"UNIT TYP" - Type of unit (REFRIG or NON-RFRG)
"FLT SIZE" - Select filter capacity
"RST BCNT" - Reset bottle count
If the button is not pushed again the display will scroll through the four messages above for three cycles and return to run mode.
3) When display shows "RST BCNT" push program button once the display will show current value, e.g. "0033183".
4) Once display shows current value push the program button once more to reset back to 0. The display will show BTLCT = 0 for approximately 2 seconds and then return to run mode showing 00000000 bottles.
NOTE: Once the bottle count is reset to zero there is no way to return to the previous bottle count.
5) Testing the bottle counter:
REFRIG units: Place bottle or hand in front of sensor for approximately 9 seconds to see bottle counter count 00000001,
(This is based on filling a 20 oz. bottle).
NON-RFRG units: Place bottle or hand in front of sensor for approximately 6 seconds to see bottle counter count 00000001,
(This is based on filling a 20 oz bottle).

SETTING FILTER CAPACITY

1) Depress the program button for approximately 2 seconds until the display changes then release. The display will change and scroll through two messages:
"RST FLTR" – Reset Filter Status LED
"SETTINGS" – System Settings Sub Menu
If the program button is not pushed again the display will scroll through the two messages above for three cycles and then default back to bottle count and be back in run mode.
2) When the display changes to "SETTINGS", depress the button again. The display will change to show:
"RNG SET"- Range set for IR sensor.
"UNIT TYP" - Type of unit (REFRIG or NON-RFRG)
"FLT SIZE" - Select filter capacity
"RST BCNT" - Reset bottle count
If the button is not pushed again the display will scroll through the four messages above for three cycles and return to run mode.
3) When display shows "FLT SIZE" push program button once. The display will show current value. Can be 3000GAL or 6000GAL.
4) Push program button again to display the desired "FLT SIZE".
5) Allow approximately 4 seconds to pass and the display will return to bottle counter and be in run mode.

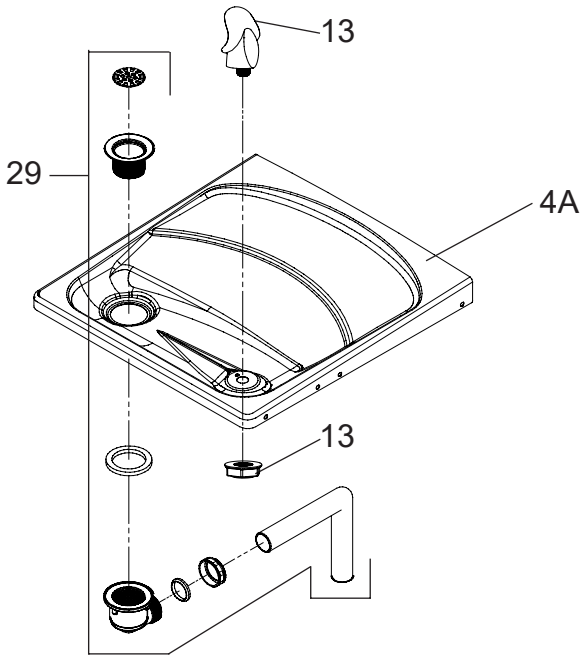

Fig. 10

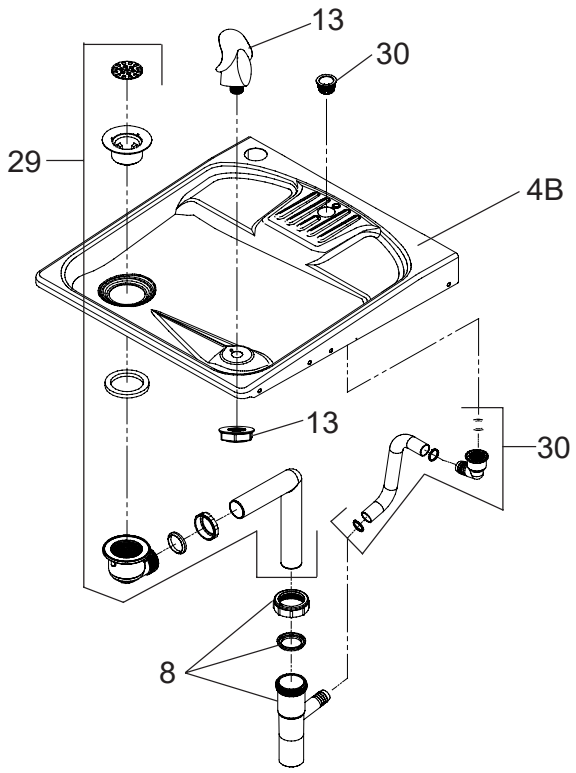

Fig. 11

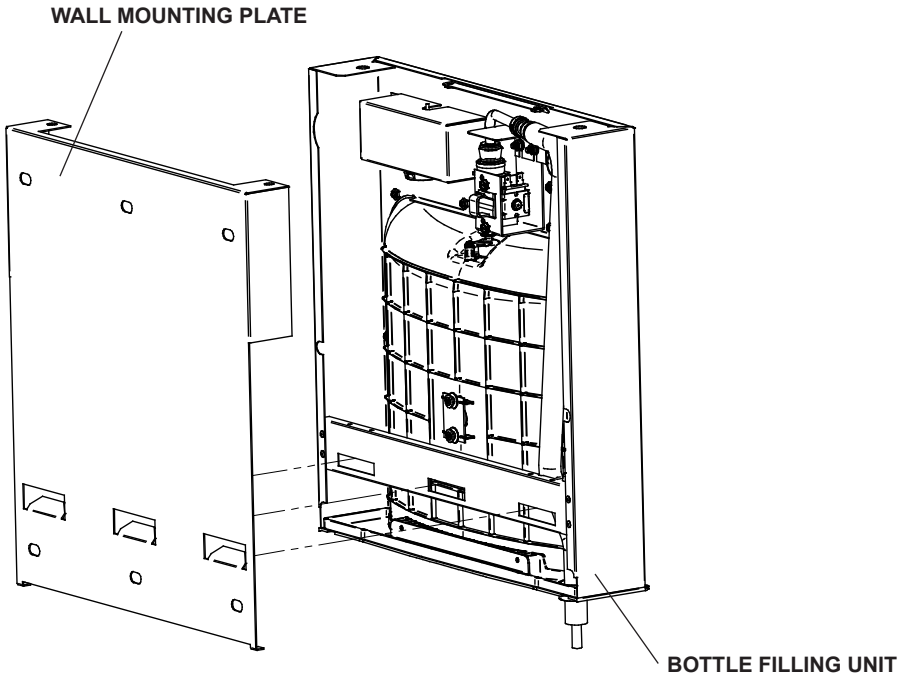

Fig. 12

Note: Danger! Electric shock hazard. Disconnect power before servicing unit.

OPERATION OF QUICK CONNECT FITTINGS

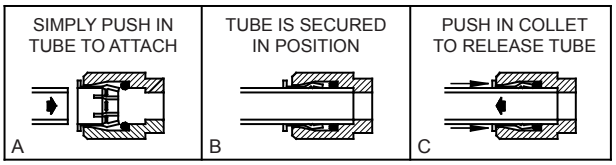

PUSHING TUBE IN BEFORE PULLING IT OUT HELPS TO RELEASE TUBE

Fig. 13

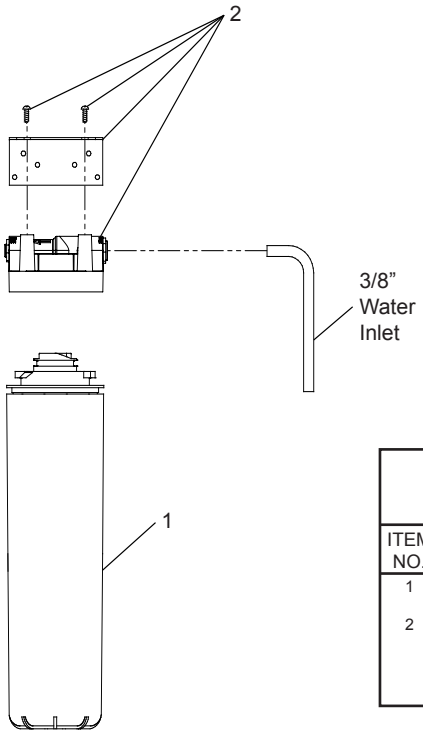

FILTER PARTS LIST (See Fig. 14)			LISTA DE PIEZAS DEL FILTRO (Vea la Fig. 14)	LISTE DES PIÈCES DU FILTRE (Voir Fig. 14)
ITEM NO.	PART NO.	DESCRIPTION	DESCRIPCIÓN	DESCRIPTION
1	51300C	Filter Assy-3000 Gal.	Ensamblado del Filtro-3000 Galón	Ens. filtre-3000 Gallon
2	0000000746	Assy-Filter & Bracket includes Fltr Head/Mtg Bkt/ John Guest Ftgs/Screws	Conjunto del Filtro y Soporte, Incluye Filtro Soporte/John Guest Guarniciones/Tornillos de Montaje de Cabeza	Assemblêe-Filtre et Support Inclut Filtre/Montage Support/John Guest/Vis à Têtê

Fig. 14

Scan for trouble shooting and to sign up for auto replenishment of authentic Elkay filters.

PARTS LIST/ LISTA DE PIEZAS/ LISTE DES PIÈCES

ITEM NO.	PART NO	DESCRIPTION	DESCRIPCIÓN	DESCRIPTION
1	22897C	Panel - Bottom Dispenser	Panel - Dispensador Inferior	Panneau - Distributeur Inférieur
2	2000002506	Kit - Regulator - HAC	Kit - Regulador - HAC	Kit - Régulateur - HAC
3	28551C	Hanger Bracket	Fijador de Suspensión	Support de Suspension
4A	28960C	Basin - Stainless Steel	Estanque - Acero Inoxidable	Bassin - Acier Inoxydable
4B	0000001338	Basin - Stainless Steel (BF)	Estanque - Acero Inoxidable (BF)	Bassin - Acier Inoxydable (BF)
5	36208C	Power Cord	Cable Eléctrico	Cordon d'Alimentation
6	*36322C	Compressor Serv. Pak EMIS70HHR	Paquete de Serv. del Compresor EMIS70HHR	Trousse D'entr. Surpresseur EMIS70HHR
7	40322C	Orifice Assembly	Ensamblado del Orificio	Ens. Orifice
8	1000004447	Kit - Drain Tube Assembly	Kit - Montaje del Tubo de Desagüe	Kit - Assemblage de Tube de Vidange
9	1000002062	Kit - Tee - 1/4 x 1/4 x 3/8 (3 Pack)	Kit - Tee -1/4 x 1/4 x 3/8 (Paquete de 3)	Tee -1/4 x 1/4 x 3/8 (Pack de 3)
10	55931C	Cover - Dispenser Bottom	Cubierta - Dispensador Inferior	Couvercle - Distributeur Inférieur
11	55996C	Strainer (See "General Instructions")	Filtro Bifurcado (Vea "Instrucciones Generales")	Grille (Voir "Directives Générales")
12	56092C	Tubing - Poly (Cut To Length)	Tubería de Polietileno (Corte a la Longitud)	Tubes - Polyéthylène (Couper à la Longueur)
13	96453C	Kit - Bubbler Replacement	Kit - Reemplazo del borboteador	Kit - Remplacement du barboteur
14	66703C	Drier	Secador	Déshydrateur
15	1000001994	Kit - Tee - 1/4" (3 Pack)	Kit - La te 1/4 (Paquete de 3)	Kit - Tee 1/4" (Pack de 3)
16	70935C	Screw - Shoulder x 1/2" Lg.	Tornillo - Hombro x 1/2"Lg.	Vis - épaulement x 1/2" lg.
17	1000001602	Kit-75583C Elbow 5/16" - 1/4"	Kit - 75583C Codo 5/16 "- 1/4"	Coude Kit - 75583C 5/16" - 1/4"
18	98724C	Kit - Evaporator Assembly	Kit - Ensamblado del Evaporizador	Kit - Ens. D'évaporateur
19	98537C	Kit - Blocks/Bumpers/Rivets	Kit - remaches de topes de bloques	Kit - blocs/pare-chocs/Rivets
20	0000000238	Kit - Electricals /OL/Relay/Cvr	Kit - Eléctrico/Sobrecarga/Relé/Cubierta	Kit-électriques/Surcharge/Relais/Couverture
21	98773C	Kit - Cold Control/Screws	Kit - Control del Enfriamiento/Tornillo	Kit - Contrôle de Refroidissement/Vis
22	98775C	Kit - Fan MoWtor Assy/Blade/Motor/ Shroud/Screws/Nut	Kit - Ventilador Motor Montaje/Hoja/Motor/ Cubierta/Tornillos/Tuerca	Kit - Ventilateur Moteur Assemblée/Lame/Moteur/ Cache/Vis/écrou
23	98776C	Kit - Condenser/Drier	Kit - Condensador/Secador	Kit - Condensateur/Déshydrateur
24	98777C	Kit - Compr Mtg Hdwe/Grommets/ Clips/Studs	Kit - Compresor Hardware/Arandelas/Clips/Pernos de Montaje	Kit - Compresseur Matériel/Oeillets/Clips/Tiges Filetées de Fixation
25	98778C	Kit - Heat Exchanger/Drier	Kit - Intercambiador de Calor/Secador	Kit - Échangeur Thermique/Déshydrateur
26	98789C	Kit - Pushbar Brackets/Screws	Kit - Hay/Soportes/Tornillos	Kit - Barres/Fixations/Vis
27	0000000872	Kit - Pushbar/Nuts	Kit - Manillar/Tuercas	Kit - Guidon/Noix
28	98899C	Kit - Hardware	Kit - Juego de Accesorios	Kit - De Visserie
29	1000001889	Kit - Drain Replacement EMABF/HAC (BF)	Kit de reemplazo de drenaje EMABF/HAC (BF)	Kit de remplacement de drain EMABF/HAC (BF)
30	1000001812	Kit - Bottle Filler Drain	Kit - de Drenaje de Llenada de la Botella	Kit de Remplissage de Bouteille de Vidange
31	28125C	Panel - Right Side (L)	Panel-Lado Derecho (L)	Panneau - Côté Droit (L)
	28124C	Panel - Right Side (SS)	Panel-Lado Derecho (SS)	Panneau - Côté Droit (SS)
32	28129C	Panel - Left Side (L)	Panel-Lado Izquierdo (L)	Panneau - Côté Gauche (L)
	28128C	Panel - Left Side (SS)	Panel-Lado Izquierdo (SS)	Panneau - Côté Gauche (SS)
33	28707C	Panel - Front Push (L)	Panel-Presión Frontal (L)	Panneau - Avant (L)
	28706C	Panel - Front Push (SS)	Panel-Presión Frontal (SS)	Panneau - Avant (SS)
34	28146C	Panel - Right Rear (L)	Panel-Retrovisor Derecho (L)	Panneau - Arrière Droit (L)
	28525C	Panel - Right Rear (SS)	Panel-Retrovisor Derecho (SS)	Panneau - Arrière Droit (SS)
35	28150C	Panel - Left Rear (L)	Panel-Retrovisor Izquierdo (L)	Panneau - Arrière Gauche (L)
	28528C	Panel - Left Rear (SS)	Panel-Retrovisor Izquierdo (SS)	Panneau - Arrière Gauche (SS)
36	28541C	Panel - Right Rear BL (L)	Panel - Derecha Trasera dos Niveles (L)	Panneau-à Droite Arrière à Deux Niveaux (L)
	28539C	Panel - Right Rear BL (SS)	Panel - Derecha Trasera dos Niveles (SS)	Panneau-à Droite Arrière à Deux Niveaux (SS)
37	28538C	Panel - Left Rear BL (L)	Panel - Izquierdo Trasero de dos Niveles (L)	Panneau-Gauche Arrière à Deux Niveaux (L)
	28536C	Panel - Left Rear BL (SS)	Panel - Izquierdo Trasero de dos Niveles (SS)	Panneau-Gauche Arrière à Deux niveaux (SS)
38	0000000804	Panel - Front Lower/Nmplt (L)	Panel - Frontal Inferior/Placa de Identificación (L)	Panneau-Front Bas/Plaque Signalétique (L)
	0000000834	Panel - Front Lower/Nmplt (SS)	Panel - Frontal Inferior/Placa de Identificación (SS)	Panneau-Front Bas/Plaque Signalétique (SS)
-	See Filter Table	Water Filter Kit (When Provided)	Kit de Filtro de Agua (Cuando Provisto)	Kit de Filtrage d'Eau (Si Fourni)

***REPLACE WITH SAME COMPRESSOR USED IN ORIGINAL ASSEMBLY.**
NOTE: All correspondence pertaining to any of the above water coolers or orders for repair parts MUST include Model No. and Serial No. of cooler, name and part number of replacement part.

***REEMPLACE CON EL MISMO COMPRESOR USADO EN EL ENSAMBLADO INICIAL.**
NOTA: Toda la correspondencia relacionada con el enfriador de agua anterior o con una orden de repa ración piezas DEBERÁ incluir el número de modelo y número de serie del enfriador, el nombre y número de pieza de la pieza de repuesto.

***REMPLACEZ AVEC LE MÊME SURPRESSEUR QUE CELUI UTILISÉ ORIGINALEMENT.**
NOTE : Toute correspondance au sujet des refroidis seurs d'eau courante ou toute commande de pièce de rechange DOIT inclure le numéro de modèle et le numéro de série du refroidisseur ainsi que le nom et le numéro de pièce à remplacer.

BOTTLEFILLER REPLACEMENT PART KITS

ITEM NO.	PART NO.	DESCRIPTION	DESCRIPCIÓN	DESCRIPTION
NS	98543C	Kit - Electrical Package	Paquete Kit - Eléctrico	Forfait Kit - Electriqueso
NS	98544C	Kit - IR Sensor	Sensor Kit - IR	Kit - Rcepteur IR
NS	1000004573	Kit - Solenoid Valve Replacement	Reemplazo de la Válvula de Solenoide Kit	Remplacement de la Valve Solénoïde - Kit
NS	98546C	Kit - Aerator Replacement	Reemplazo Kit - Aireador	Remplacement du Kit - Aérateur
39	98547C	Kit - Top Cover Replacement	Kit - Tapa Cubierta Reemplazo	Remplacement du Kit - Top Couvercle
NS	98549C	Kit - Hardware & Waterway Parts	Piezas del Kit - De Hardware y Por Vía Navegable	Pièces Kit - Matériel et Voie Navigable
NS	98551C	Kit - Filter Mounting Cover (L)	Cubierta del Filtro de Kit - De Montaje (L)	Couvercle de Filtre - Kit Montage (L)
NS	98669C	Kit - Filter Mounting Cover (SS)	Cubierta del Filtro de Kit - De Montaje (SS)	Couvercle de Filtre - Kit Montage (SS)
NS	98552C	Kit - Retro Filter Mounting	Montaje de Filtro Kit - Retro	Montage de Retro - Kit Filtre
NS	2000001488	Universal Bottle Filler Gasket	Junta universal para llenado de botellas	Joint de remplissage de bouteille universel

NS = NOT SHOWN

1000001718

REPAIR SERVICE INFORMATION TOLL FREE NUMBER 1.800.260.6640
NÚMERO GRATIS DE SERVICIO 1.800.260.6640
INFORMATIONS POUR LE SERVICE PAR NUMERO SANS FRAIS 1.800.260.6640

Patent zurnelkay.com/patents

FOR PARTS, CONTACT YOUR LOCAL DISTRIBUTOR OR CALL 1.800.834.4816
PARA PIEZAS, CONTACTE A SU DISTRIBUIDOR LOCAL O LLAME AL 1.800.834.4816
POUR OBTENIR DES PIÈCES, CONTACTEZ VOTRE DISTRIBUTEUR LOCAL OU COMPOSEZ LE 1.800.834.4816

PRINTED IN U.S.A.
IMPRESO EN LOS E.E.U.U.
IMPRIMÉ AUX É.-U.

ELKAY MANUFACTURING Co. • 1333 BUTTERFIELD ROAD SUITE 200 • DOWNERS GROVE • IL 60515 • U.S.A 630.574.8484 • www.elkay.com