ELKAY®

Installation and Use Manual

EMASMB & LMASMB Surface Mount Bottle Filling Stations

Model
EMASMB

BUILT IN USA OF DOMESTIC AND FOREIGN PARTS

IMPORTANT

THIS IS AN INDOOR APPLICATION ONLY!
ALL SERVICE TO BE PERFORMED BY AN AUTHORIZED SERVICE PERSONNEL.

TOOLS/ITEMS REQUIRED

BUT NOT SUPPLIED

- SERVICE STOP VALVE WITH 3/8" COMPRESSION OUTLET
- FASTENERS FOR WALL TYPE (8 REQ'D.)
- SLIP JOINT DRAIN UNION OR COMPRESSION CLAMP
- 5/32" HEX-WRENCH

Installer

To assure you install this model easily and correctly, PLEASE READ THESE SIMPLE INSTRUCTIONS BEFORE STARTING THE INSTALLATION. CHECK YOUR INSTALLATION FOR COMPLIANCE WITH ALL PLUMBING, ELECTRICAL AND OTHER APPLICABLE CODES. FOLLOW ALL WARNINGS AND CAUTIONS CAREFULLY. After installation, leave these instructions with the customer for future reference.

Warnings

1. Use with clean, clear, fresh potable drinking water only! Do not use with water that is microbiologically unsafe or of unknown quality without adequate disinfection before the system.
2. These products are designed to operate on 20 to 105 PSI (0.14-0.72 MPa) supply line pressure and a maximum water temperature of 90°F (32°C). If inlet pressure is above 105 PSI (0.72 MPa), a pressure regulator must be installed in supply line. Any damage caused by reason of connecting this product to supply line pressure lower than 20 PSI or higher than 105 PSI is not covered by warranty.

This appliance can be used by children aged from 8 years and above and persons with reduced physical, sensory or mental capabilities or lack of experience and knowledge if they have been given supervision or instruction concerning use of the appliance in a safe way and understand the hazards involved. Children shall not play with the appliance. Cleaning and user maintenance shall not be made by children without supervision.

1000002042 (Rev. J - 04/26)

ROUGH-IN
EMASMB & LMASMB
ADA STAND-ALONE MOUNTING

IMPORTANT!

INSTALLATION NOTES:

- **Ensure wall is structurally sound to bear the loads imparted by the Surface Mount Bottle Filler.**
- **Ambient air temperature limits: 10°C - 38°C (50°F - 100.4°F). Climate Class SN-ST.**
- **Not suitable for installation in areas where water jets could be used.**

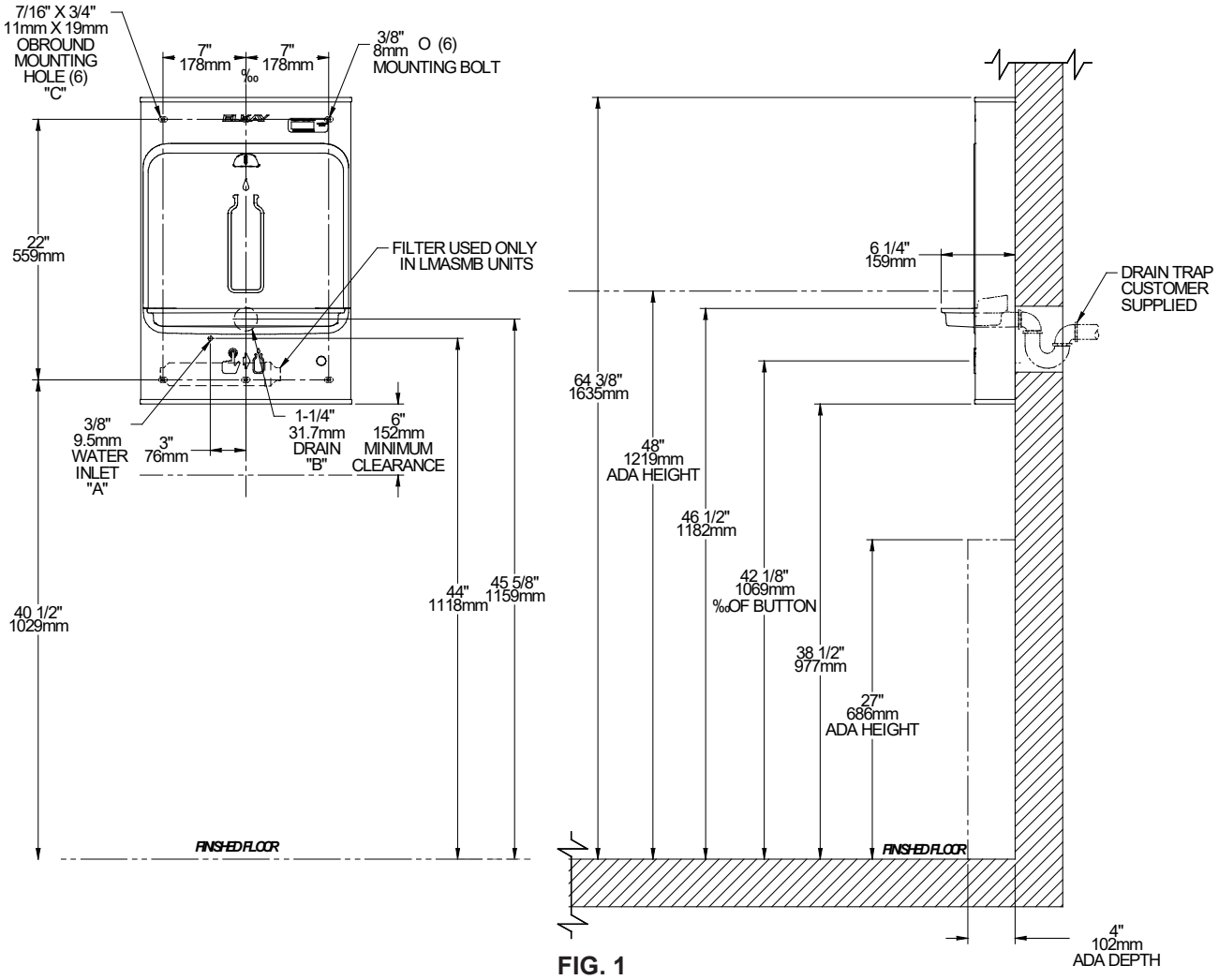

FIG. 1

LEGEND:

A = RECOMMENDED WATER SUPPLY LOCATION; 1/2" IPS MAXIMUM PIPE SIZE. SERVICE STOP VALVE NOT FURNISHED. MAXIMUM WATER SUPPLY PRESSURE: 105 PSI (0.73 MPa)

B = RECOMMENDED WASTE LOCATION. WASTE SHOWN IN WALL BUT MAY BE BEHIND WALL. OUTLET 1-1/4" O.D. (TRAP NOT FURNISHED)

C =7/16" X 3/4" OBROUND MOUNTING HOLES FOR FASTENING BACKPLATE TO WALL.

<u>Pre-Installation</u> (reference Rough-Ins, Fig. 1 and Fig. 2)

1. **Ensure Wall is structurally sound** to bear the loads imparted by the EMASMB or LMASMB Bottle Filler (On-Wall Bottle Filler).
2. **Ensure Water Supply Line and Drain Line are sized** and located as specified the Rough-in diagram.
3. **Attach Service Stop Valve (not supplied) to Water Supply line** orienting the 3/8"O.D. female compression outlet horizontally to the left. Purge water line and test for leakage. Correct any leakage.

ROUGH-IN
EMASMB & LMASMB
ADA ABOVE COOLER MOUNTING

IMPORTANT!

INSTALLATION NOTES:

- **Ensure wall is structurally sound to bear the loads imparted by the Surface Mount Bottle Filler.**
- **Ambient air temperature limits: 10°C - 38°C (50°F - 100.4°F). Climate Class SN-ST.**
- **Not suitable for installation in areas where water jets could be used.**

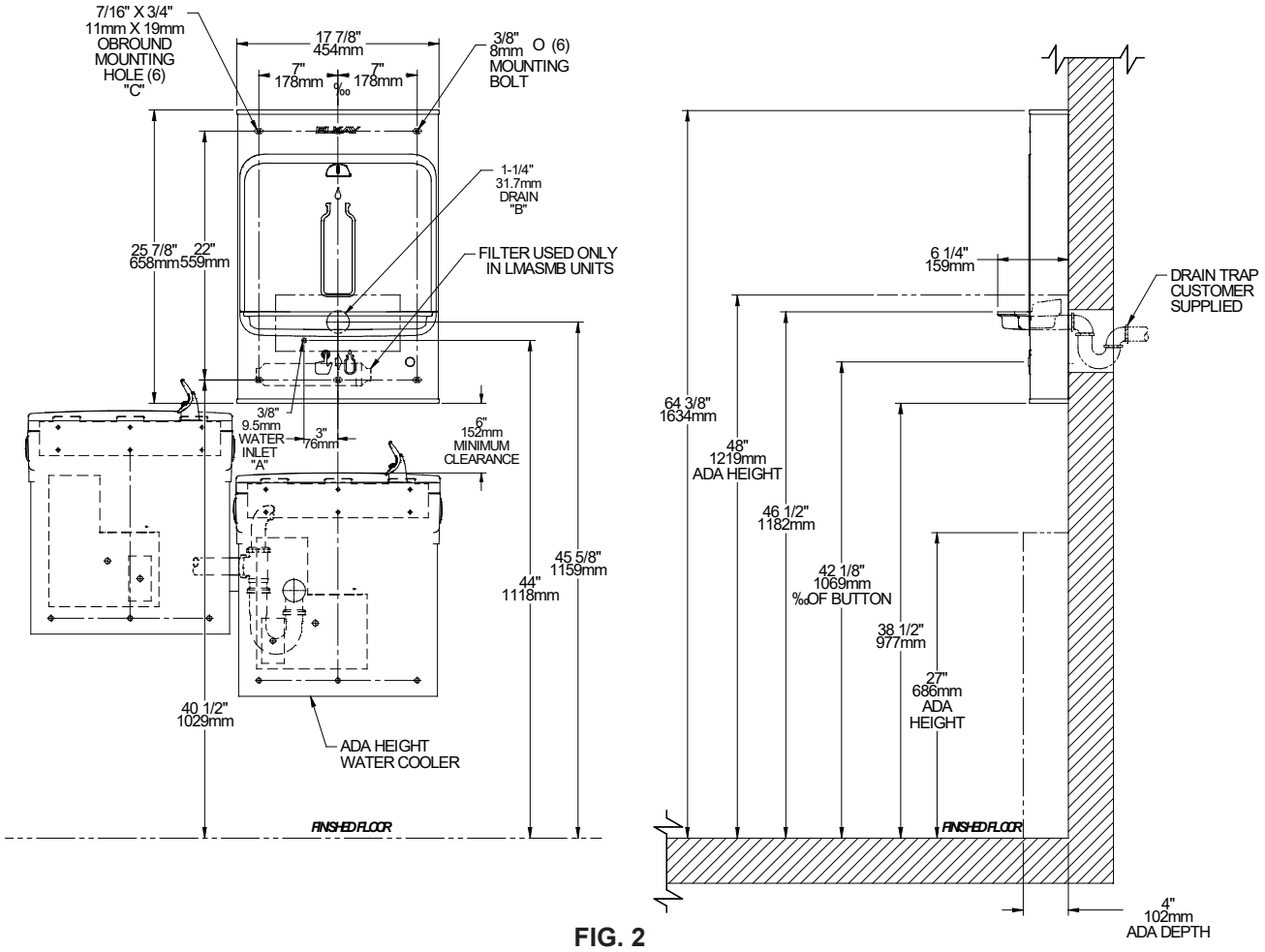

FIG. 2

LEGEND:

A = RECOMMENDED WATER SUPPLY LOCATION; 1/2" IPS MAXIMUM PIPE SIZE. SERVICE STOP VALVE NOT FURNISHED. MAXIMUM WATER SUPPLY PRESSURE: 105 PSI (0.73 MPa)

B = RECOMMENDED WASTE LOCATION. WASTE SHOWN IN WALL BUT MAY BE BEHIND WALL. OUTLET 1-1/4" O.D. (TRAP NOT FURNISHED)

C =7/16" X 3/4" OBROUND MOUNTING HOLES FOR FASTENING BACKPLATE TO WALL.

<u>Pre-Installation</u> (reference Rough-Ins, Fig. 1 and Fig. 2)

1. **Ensure Wall is structurally sound** to bear the loads imparted by the EMASMB or LMASMB Bottle Filler (On-Wall Bottle Filler).
2. **Ensure Water Supply Line and Drain Line are sized** and located as specified the Rough-in diagram.
3. **Attach Service Stop Valve (not supplied) to Water Supply line** orienting the 3/8"O.D. female compression outlet horizontally to the left. Purge water line and test for leakage. Correct any leakage.

INSTALLATION INSTRUCTIONS

Ensure packaging contains the following components

EMASMB UNIT SHOWN

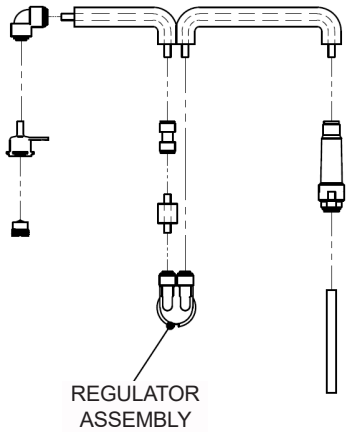

PLUMBING DIAGRAM
NON-FILTERED

INSTALLER TO SUPPLY:
SHUT OFF VALVE

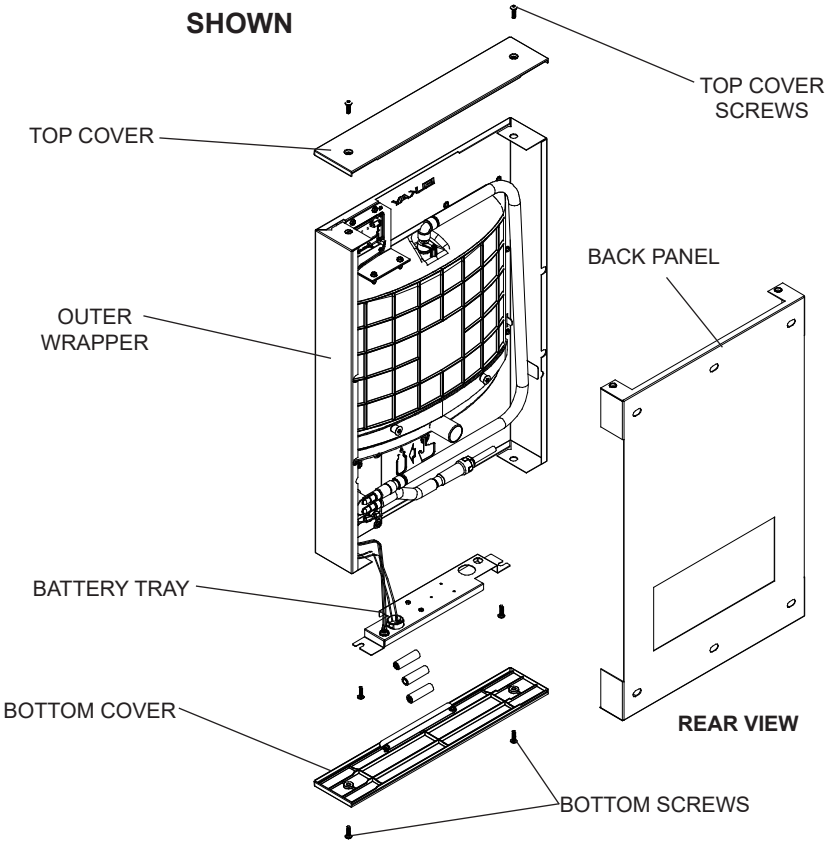

Warm, soapy water or mild household cleaning products can be used to clean the exterior panels. Extra caution should be used to clean the mirror finished stainless steel panels. They can be easily scratched and should only be cleaned with mild soap and water or Windex glass cleaner and a clean, soft cloth. Use of harsh chemicals or petroleum based or abrasive cleaners **will void the warranty.**

LMASMB UNIT SHOWN

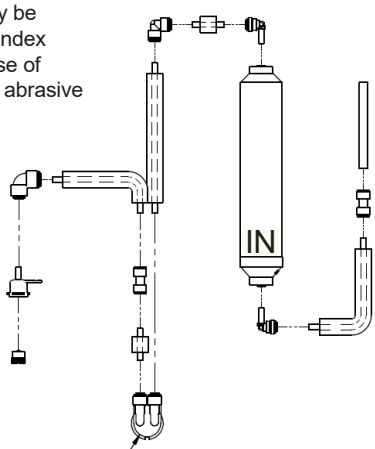

PLUMBING DIAGRAM
FILTERED

INSTALLER TO SUPPLY:
SHUT OFF VALVE

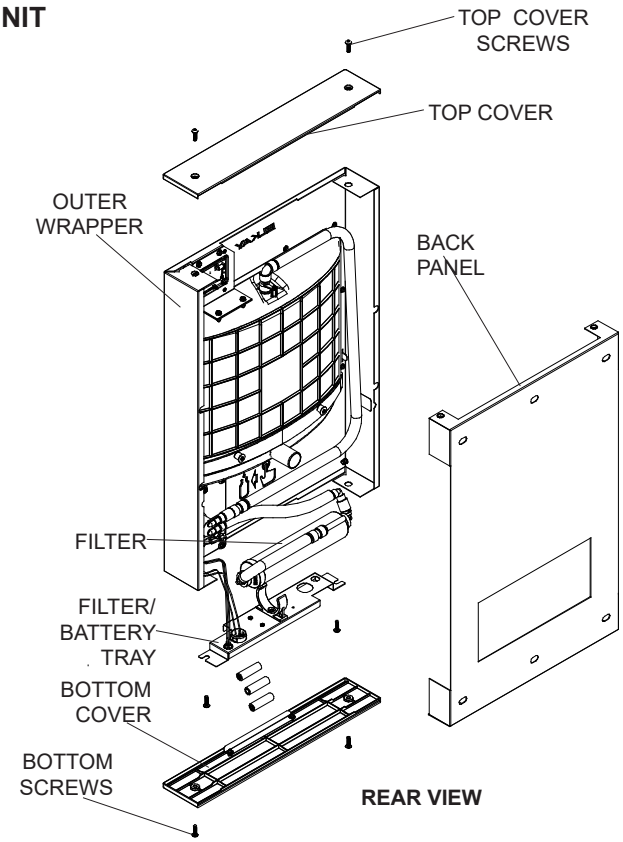

INSTALLATION INSTRUCTIONS

Wall Mounting (reference Rough-Ins, Fig. 1 and Fig. 2)

1. **Remove Top Cover from Bottle Filler** by removing two (2) screws from bottom of unit. Use a 5/32" hex wrench (not supplied).
2. **Remove Bottom Cover from Bottle Filler** by removing two (2) screws from bottom of unit. Use a 5/32" hex wrench (not supplied).
3. **With the Top and Bottom Covers removed,** the Back panel is now free to be removed from Bottle Filler.
4. **Fasten Back Panel to structurally secure wall** thru five 7/16" obround holes with fasteners appropriate for wall type. Locate Back Panel as specified in Rough-In.
5. **Ensure Back Panel is not obstructed** by the roughed-in Water and Drain Lines. If Back Panel is prevented from seating properly, reposition Water and/or Drain Lines slightly until the Bottom Cover fits easily.
6. **Before hanging the On-Wall Bottle Filler,** ensure the Insulated Waterline is routed inside of the Wrapper. If outside the Wrapper, reposition to inside or else the unit cannot be installed properly.
7. **Hang the Bottle Filler onto the Back Panel,** aligning two tabs onto the top of the Back Panel.
8. **Secure Bottle Filler to Back Panel** by replacing Top Cover on top of unit and fastening with two (2) supplied screws.
9. **Replace the Bottom Cover** on bottom of the unit and fasten in place with two (2) supplied screws.

Plumbing Connections

- Ensure lines and ports remain clean and free of contaminants during assembly.
- Purge each component if necessary.
- To ensure quick-connect connections seal properly, follow instructions per Figure 3, Page 6.

Connect Plumbing Lines. NOTE: Connecting to water mains must be in compliance with local and national laws.

1. **Connect water supply line to unit: NOTE: Hose-sets are not to be used for connecting to water mains.**
2. **Connect the 3/8"O.D. Copper tube** from the in-line strainer to the 3/8" to the Service Stop Valve.
3. **Connect the 1-1/4"O.D. Drain Tray Outlet** to the in-wall Drain Line using a Slip Joint Drain Union or compression clamp (not supplied). Tighten all connections water tight.
4. **Turn water supply on,** inspect for leaks and correct any leaks before continuing.

Instruction for Use

1. **Place container under the dispenser nozzle** and depress the actuator button. Hold until container is filled to the level desired.
2. **To stop water flow,** release actuator button. Pull container away from dispenser nozzle.

Installing/Replacing Batteries:

1. **Remove Bottom Cover from Bottle Filler** by removing two (2) screws from bottom of unit. Use a 5/32" hex wrench (not supplied. The battery tray is located on the bottom cover. Install the (3) "AA" batteries in the battery tray.
2. **Confirm unit is on:** Display will show *00000000*

2.1. **Filtered Units:** The Filter Status Green LED will be illuminated momentarily to show filter status when button is pushed and the Bottle Counter LCD on the Nameplate displays bottle count.

2.2. **Non-Filtered Units:** The Bottle Counter LCD on the Nameplate displays bottle count.

3. **Ensure water dispenses:** Activate unit by depressing the button. Water should flow. It is normal for the water stream to sputter with air when the unit is new or a new filter cartridge is installed.
4. **Ensure a steady water flow is obtained:** Activate unit per above and hold until all air entrapped in lines and filter is purged. Multiple activations may be required.
5. **Inspect for leaks** and if any found, correct before continuing.
6. **If setting up the Control Board** for the first time, go to Setting the Control Board section before continuing.
7. **Place Bottom Cover in position** on underside of unit with long tab against wall and slide up into Back Panel opening. Secure with two supplied Allen head screws using a 5/32" hex-wrench (not supplied).

Changing the Filter

1. **Remove the Bottom Cover** of the Bottle Filler by removing the two (2) screws.
2. **Remove (1) screw** and loosen other on filter tray and slide out to allow access to the filter.
3. **Release filter from water lines** (see Figure 3, Page 6) for operation of quick connect fittings.
4. **Remove new filter from carton,** remove protective cap; cap may be placed on an old filter to reduce the chance of the water spilling from filter housing.
5. **Attach filter to water lines** (see Figure 3, Page 6) for operation of quick connect fittings.
6. **Actuate Bottle Filler** until approximately 1 gallon of water is dispensed. This flushing procedure purges air and fine carbon particles from the filter.

SETTING THE CONTROL BOARD

VERIFY CONTROL BOARD SOFTWARE

1) To verify the software program of the control board the unit will need to be shut down and restarted. The chiller (if present) does not need to be shut down and restarted.
2) Shut down the unit by removing a battery.
3) Restart the unit by installing the batteries
4) Upon start up the bottle count display will show the software designation of 'ELKAY BC'.

ACCESSING THE PROGRAMING BUTTON

1) To access the program button, remove the two (2) screws holding the Bottom Cover in place. Button is located within finger reach from the underside of the unit on the back right hand side of the battery/filter tray.
2) When finished setting control board, reinstall the Bottom Cover and secure with the same two (2) screws.

RESET THE FILTER MONITOR

1) Instructions apply to filtered units only.
2) Depress the program button momentarily. The display changes when released. The display will change and scroll through four messages:

   "RST FLTR" – Reset Filter Status LED
   "NO FLTR" – EMASMB or non-filtered mode
   "500G FLT" – LMASMB or Filtered mode
   "RST BCNT" - Reset bottle count

If the program button is not pushed again the display will scroll through the four messages above for and then default back to bottle count and be back in run mode.

3) When the display changes to "RST FLTR", depress the button again. The display will change to show "FC RESET". Depress the button again and the display will show "00000000"
4) There are three (3) LED's that indicate the following:

   Green: LED (Good) indicates that the filter is operating within 0% - 80% of its life.

   Yellow: LED indicates that the filter is operating within 80% - 100% of its life.

   Red: LED (Replace) indicates that the filter needs to be replaced since it has reached end of filter life and flow restrictions.

OPERATION OF QUICK CONNECT FITTINGS

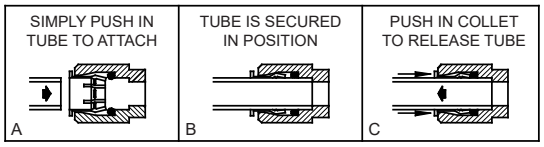

PUSHING TUBE IN BEFORE PULLING IT OUT HELPS TO RELEASE TUBE

FIG. 3

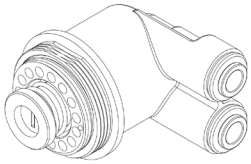

REGULATOR

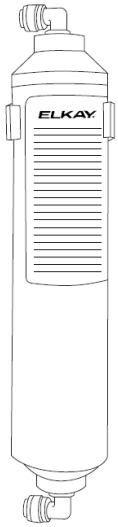

FILTER

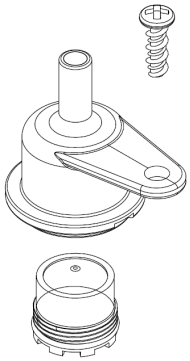

AERATOR

RESETTING BOTTLE COUNT

1) Depress the program button momentarily. The display will change and scroll through four messages:

   "RST FLTR" – Reset Filter Status LED
   "NO FLTR" – EMASMB or non-filtered mode
   "500G FLT" – LMASMB or Filtered mode
   "1500G FLT" – NOT AVAILABLE - LMASMB
   "3000G FLT" – NOT AVAILABLE - LMASMB
   "6000G FLT" – NOT AVAILABLE - LMASMB
   "RST BCNT" – Reset bottle count

   If the program button is not pushed again the display will scroll through the four messages above for and then default back to bottle count and be back in run mode.

2) When the display changes to "RST BCNT", push the button again and the display will show "BC RESET" If the button is not pushed again the display will return to run mode.

3) Push the program button once more to reset back to 0. The display will and then return to run mode showing 00000000 bottles.

   NOTE: Once the bottle count is reset to zero there is no way to return to the previous bottle count.

4) Testing the bottle counter:
   EMASMB units: Push button for approximately 9 seconds to see bottle counter count 00000001.

   NOTE: Bottle count is approximate and is dependent on water pressure and flow through the filter. LMASMB units: Push button for approximately 19 seconds to see bottle counter count 00000001.

   NOTE: Bottle count is approximate and is dependent on water pressure and flow restrictions.

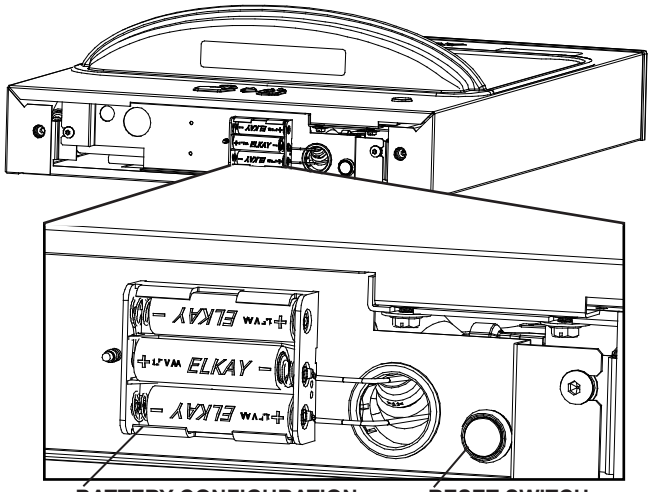

REPLACEMENT PARTS	
PART NO.	DESCRIPTION
1000001673	KIT-1.0 GPM REGULATOR KIT
98546C	KIT-AERATOR
56192C	REPLACEMENT FILTER

Patent zurnelkay.com/patents

PRINTED IN U.S.A.

REPAIR SERVICE INFORMATION TOLL FREE NUMBER 1.800.260.6640
FOR PARTS, CONTACT YOUR LOCAL DISTRIBUTOR OR CALL 1.800.834.4816
ELKAY MANUFACTURING COMPANY • 1333 BUTTERFIELD ROAD • DOWNERS GROVE, IL 60515 • 630.574.8484 • www.elkay.com