ELKAY® With FLEXI-GUARD®

INSTALLATION & USE MANUAL

SWIRLFLO® Refrigerated fountains with FLEXI-GUARD® and ezH2O® Bottle Filler

EZWS-ERPBM8K

LZWS-LRPBM8K

INSTALLER

CAUTION: Review these instructions before beginning installation. Be sure that installation conforms to all plumbing, electrical and other applicable codes.

WARNING: When installation is complete, ensure these instructions are left in the plastic bag provided inside the installed unit for future reference.

WARNING: Service to be performed by authorized service personnel only.

NOTE: It is common practice to ground electrical hardware such as telephones, computers and other devices to available water lines. This can, however, cause electrical feedback in the plumbing circuit, which results in an “electrolysis” effect occurring in the fountain. This may result in water which has a metallic taste to it or has a noticeable increase in the metallic content of the water.

When inspecting plumbing circuit, remember the line may be grounded some distance from the installation, and may occur outside the building or area in which the unit is being installed.

This condition can be avoided (in most cases) by using recommended materials during installation. Any drain fittings provided by the installer should be made of ***plastic*** which will *electronically isolate* the fountain from the remainder of the building’s plumbing circuits.

NOTE: DANGER! ELECTRICAL SHOCK HAZARD. DISCONNECT POWER BEFORE SERVICING UNIT.

Models EZWS-ERPBM8K / LZWS-LRPBM8K

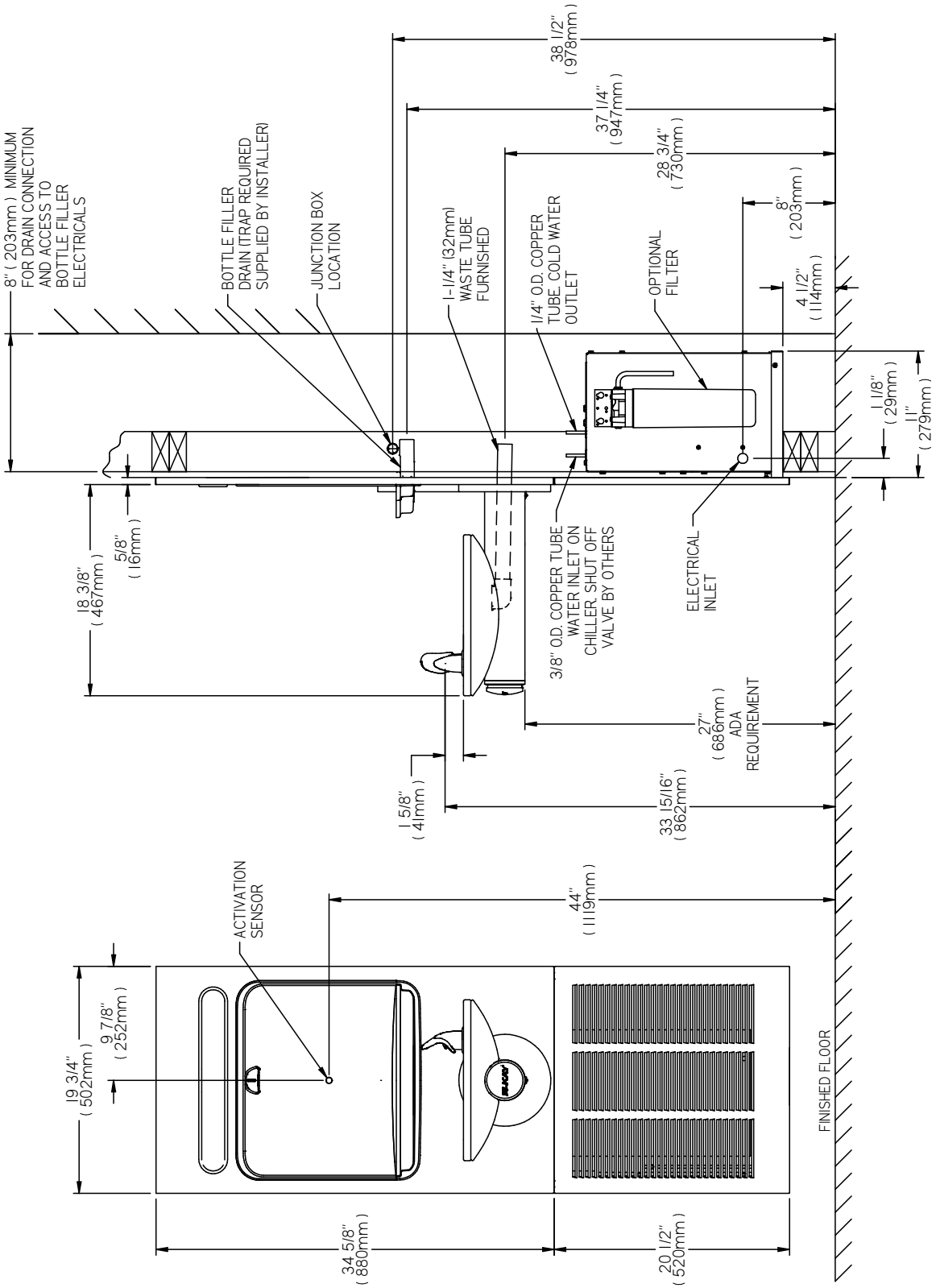

****NEW INSTALLATIONS MUST USE GROUND FAULT CIRCUIT INTERRUPTER *GFCI)**

MAXIMUM WATER SUPPLY PRESSURE : 105 PSI (0.73 MPa)

Figure 1 - Rough-in Dimensions

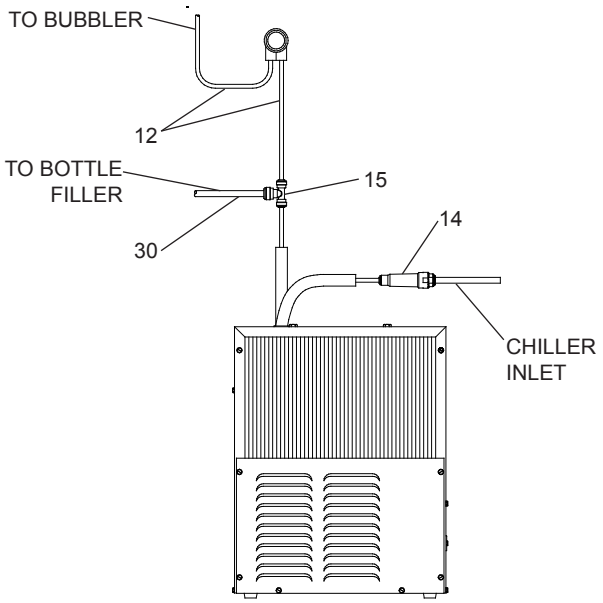

Figure 2 - EZWS-ERPB Tube Routing

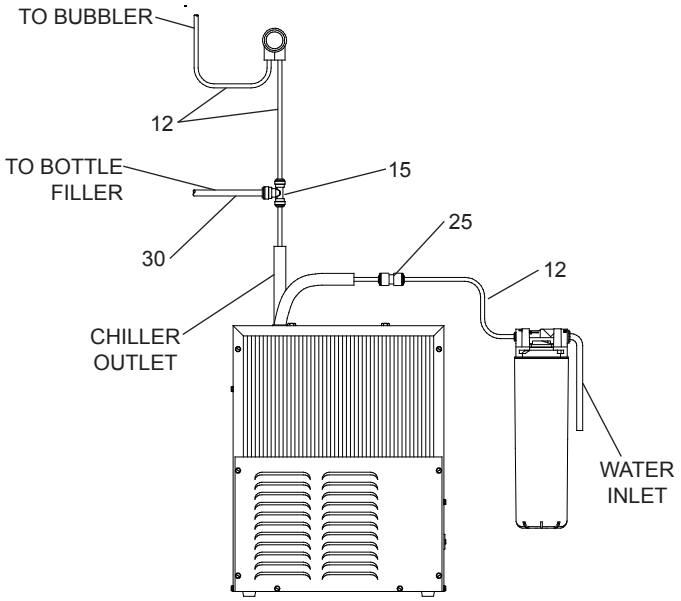

Figure 3 - LZWS-LRPB Tube Routing

REQUIRED TOOLS AND MATERIALS

These tables show special tools and/or additional materials (not provided) which are necessary to complete installation of these units:

Special Tools		
Item	**Description**	**Quantity**
	NONE	

Additional Materials Not Included		
Item	**Description**	**Quantity**
1	Unplated copper inlet pipe	1
2	Service Stop/Shut-off Valve	1
3	90° 1-1/4” Drain Line	1
4	1-1/4” Tee Drain Line	1

1. **Make water supply connections.** Install a shut-off valve and union connection to building water supply (valve and union not provided). Turn on water supply and flush the line thoroughly.
   Caution: DO NOT SOLDER tubes inserted into the strainer or filter head as damage to the o-rings may result.

2. **Install mounting frame** (instructions supplied with mounting frame.

3. **(For EZWS-ERPBM8K) Install the strainer** on the inlet tube of the chiller. Install 1/4” x 1/4” x 3/8” tee on outlet tube of the chiller per (Fig. 2).

4. **(For LZWS-LRPBM8K) Install the filter head** to the bracket then install bracket to side of chiller (Fig. 9). Next install filter to filter head and plumb from filter outlet to the chiller inlet with 1/4” poly tubing and 1/4” x 1/4” union per (Fig. 3).

4a. **Install chiller on shelf,** install 1/4” X 1/4” x 3/8” Tee on chiller outlet tube. With the back panel standing close to the frame, connect the 3/8” poly tube coming from the bottle filler to the tee (Fig. 3).

   Note: Building construction must allow for adequate air flow on both sides, top & back of chiller. A minimum of 4” (102 mm) on both sides & top is required. See chiller installation for additional instructions.

5. **Hang main panel** on mounting frame hanger. Plug bottle filler into wall box receptacle. Make sure the power cord, reset switch wire & poly tube do not get pinched between the panel & mounting frame. Ensure the panel engages at the top. Align fountain holes with mounting frame holes.

6. **Remove protective coating** from main panel.

7. **Install** reset switch for bottle filler (Fig. 4A). Snap the switch into position after locating wires through slot. Wrap up the excess cord.

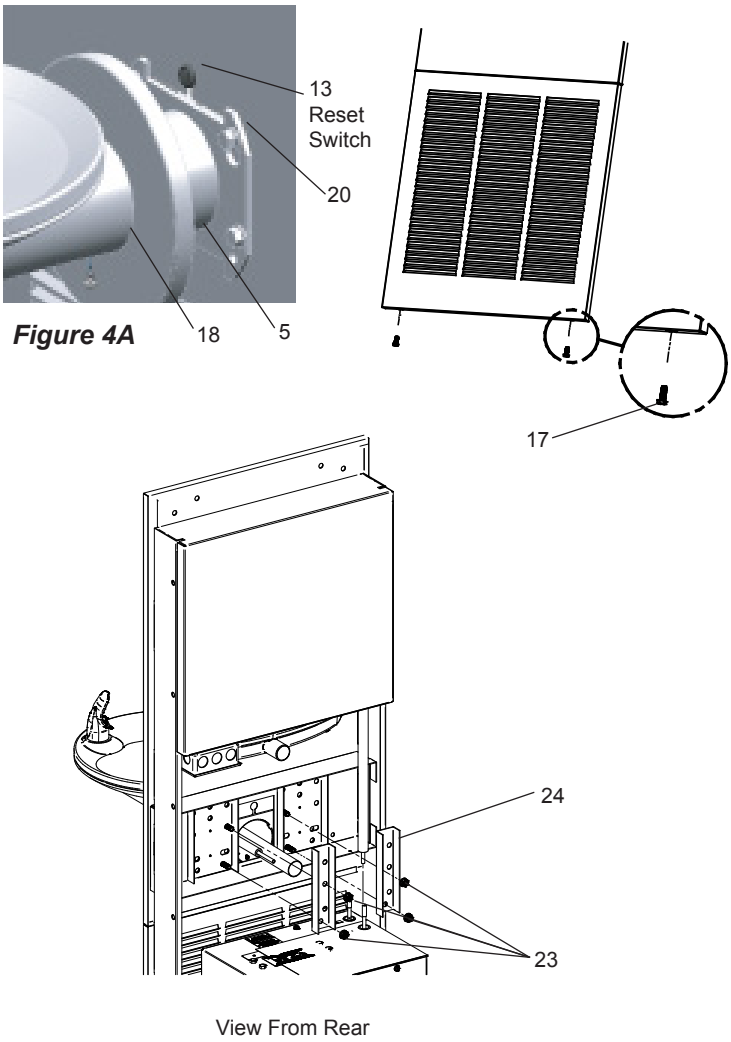

Figure 4A

Figure 4 - Fountain Installation

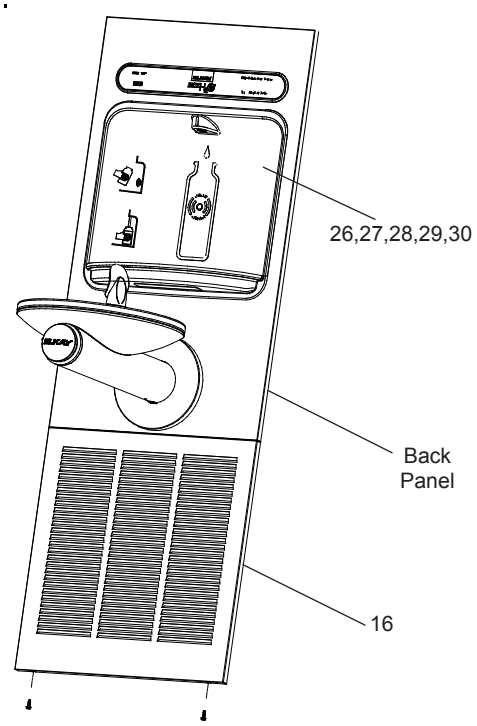

Figure 5 - Lower Panel Installation

8. **Install fountains** with (4) 5/16-18 HHMS, (4) 5/16-18 nuts & (2) support brackets (provided) (Fig. 4). Connect the ¼" water line from fountain to the remaining opening on the tee at the remote chiller (cut lines to fit as needed), (Test fit refrigerated panel to make sure there is a tight joint between it & the main panel before fully tightening mounting screws.)

9. **Attach waste tubes** (1-1/4" O.D.) to 1-1/4" O.D. slip trap. Trap on the bottle filler side must be 1-1/2" O.D. (provided by others).

10. **Make final water supply connections.**

11. **These products are designed to operate on 20-105 PSI supply line pressure.** If inlet pressure is above 105 PSI, a pressure regulator must be installed in the supply line. (Caution: Any damage caused by connecting these products to a supply line with pressure lower than 20 PSI or higher than 105 PSI IS NOT covered under warranty.)

12. **Make electrical connections** to the bottle filler and remote chiller. The LCD Bottle counter should illiminate.

13. **Verify proper dispensing** from the bottle filler by placing a cup, hand or any opaque object in front of sensor area and verify water dispenses. Note: the first initial dispenses might have air in the line which may cause a sputter. This will be eliminated once all air is purged from the line. A steady stream of water assures all air is removed. The sensor has a 20 second maximum ON time. It may be necessary to step away from the beam a few times to purge all air. Check for leaks.

14. **Check stream height from bubbler.** Stream height is factory set for 35 PSI supply. If supply pressure varies greatly from this, remove push button (Item 7 - Fig. 8) and adjust the screw on the regulator (Item 8 - Fig. 8). To remove push but ton, remove setscrew from bottom of sleeve (Item 21). Insert a small punch in screw hole and push up while grasping the push button and pull forward removing the push button. Clock wise adjustment will raise stream height and counterclockwise movement will lower stream height. For best adjustment stream should hit basin approximately 6-1/2" from the bubbler. Reassemble the push button by pushing in on button until the push button catches in the sleeve. Reinstall the setscrew (Item 21) in the sleeve (Item 6).

15. **Install the cover plate.**

16. **Install** the bottom panel, tighten screws (Fig. 5).

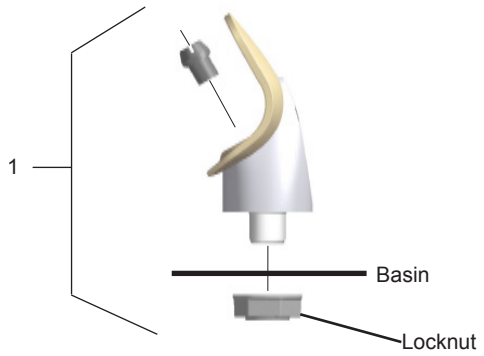

Figure 6 - Flexi-Guard® Bubbler Detail

NOTE:
When installing replacement bubbler and pedestal tighten locknut only to hold parts snug in position. **Do Not over-tighten.**

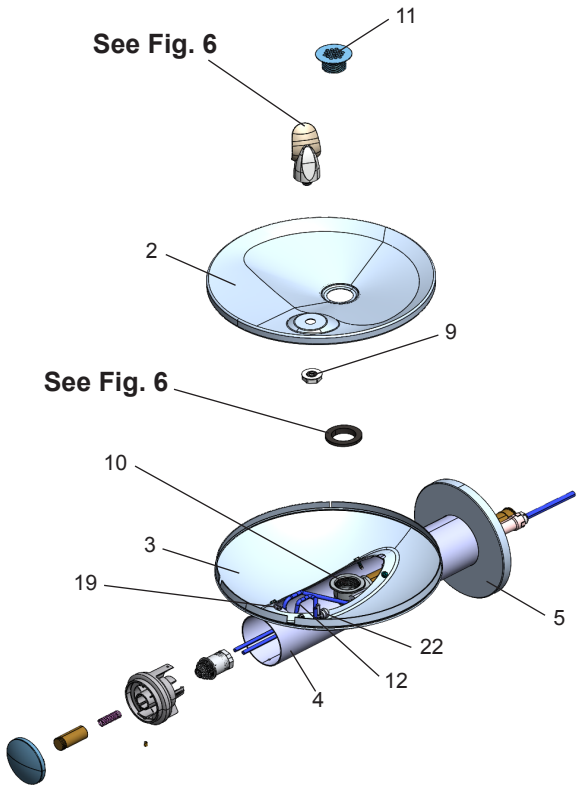

Figure 7 - Fountain Body Assembly

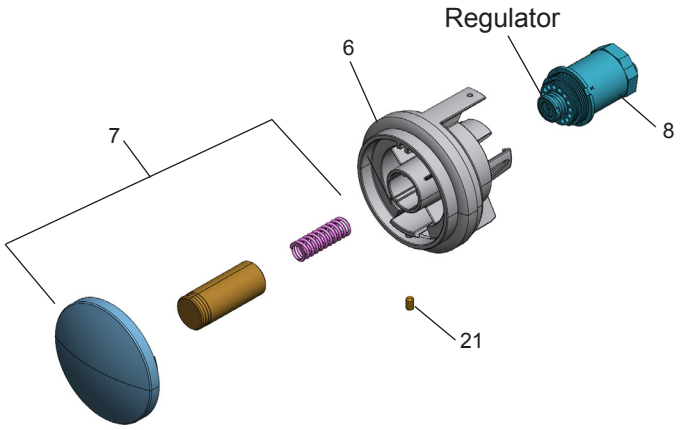

Figure 8 - Push Button Assembly

BF11 - BF12 PROGRAM
SETTING THE CONTROL BOARD

VERIFY CONTROL BOARD SOFTWARE

1) To verify the software program of the control board the unit will need to be shut down and restarted. The chiller (if present) does not need to be shut down and restarted.
2) Shut down the unit by unplugging the power cord from the wall outlet or switching off the circuit breader to the unit..
3) Restart the unit by plugging the power cord back into the wall outlet or by switching on the circuit breaker to the unit.
4) Upon start up, the bottle count display will show the software designation of BF11 or BF12.

ACCESSING THE PROGRAMMING BUTTON

1) To access the program button, remove #8-32 screw, pull back cover plate on fountain arm (Fig. 4A). Reset button is located above fountain arm.

RESET THE FILTER MONITOR

1) Instructions apply to filtered units only.
2) Depress the program button for approximately 2 seconds until the display changes then release. The display will change and scroll through two messages:
   "RST FLTR" – Reset Filter Monitor
   "SETTINGS" – System Settings Sub Menu
   If the program button is not pushed again the display will scroll through the two messages above for three cycles and then default back to bottle count and be back in run mode.
3) When the display changes to "RST FLTR", depress the button again. The display will change to show "FLTR =". Depress the button again and the display will show "FLTR =0"
4) The Green LED should be illuminated indicating that the visual filter monitor has been reset.

SETTING RANGE OF THE IR SENSOR WHERE APPLICABLE

1) Depress the program button for approximately 2 seconds until the display changes then release. The display will change and scroll through two messages:
   "RST FLTR" – Reset Filter Status LED
   "SETTINGS" – System Settings Sub Menu
   If the program button is not pushed again the display will scroll through the two messages above for three cycles and then default back to bottle count and be back in run mode.
2) When the display changes to "SETTINGS", depress the button again. The display will change to show
   "RNG SET" - Range set for IR sensor.
   "UNIT TYP" - Type of unit (REFRIG or NON-RFRG)
   "FLT SIZE" - Select filter capacity
   "RST BCNT" - Reset bottle count
3) When display shows "RNG SET" push program button once the display will show current value (can be 1 – 10) e.g. "RNG = 3".
4) Once display shows current value push the program button to scroll through value of 1 – 10. Select the desired range setting, "1" being closest to sensor and "10" being farthest away.
5) Once range is selected allow approximately 4 seconds to pass and then the display will go back to bottle counter and be in run mode.
6) Test bottle filler by placing bottle or hand in front of sensor to make sure water is dispensed.

SETTING UNIT TYPE

1) Depress the program button for approximately 2 seconds until the display changes then release. The display will change and scroll through two messages:
   "RST FLTR" – Reset Filter Status LED
   "SETTINGS" – System Settings Sub Menu
   If the program button is not pushed again the display will scroll through the two messages above for three cycles and then default back to bottle count and be back in run mode.
2) When the display changes to "SETTINGS", depress the button again.
   The display will change to show
   "RNG SET" - Range set for IR sensor.
   "UNIT TYP" - Type of unit (REFRIG or NON-RFRG)
   "FLT SIZE" - Select filter capacity
   "RST BCNT" - Reset bottle count

Continued from below:

3) When display shows "UNIT TYPE" push program button once the display will show current value. Can be REFRIG or NON-RFRG
4) Push button once to change value. Once value is selected the display will show the new value. (Can be REFRIG or NON-RFRG)
   "REFRIG" - stands for refrigerated product. In this setting the flow rate is estimated at 1.0 gallon per minute.
   "NON-RFRG" - stands for nonrefrigerated product. In this setting the flow rate is estimated at 1.5 gallons per minute. Both "REFRIG" and "NON-RFRG" simulate 1 bottle equal to 20 oz.
5) Allow approximately 4 seconds to pass and the display will return to bottle counter and be in run mode.

RESETTING BOTTLE COUNT

1) Depress the program button for approximately 2 seconds until the display changes then release. The display will change and scroll through two messages:
   "RST FLTR" – Reset Filter Status LED
   "SETTINGS" – System Settings Sub Menu
   If the program button is not pushed again the display will scroll through the two messages above for three cycles and then default back to bottle count and be back in run mode.
2) When the display changes to "SETTINGS", depress the button again. The display will change to show:
   "RNG SET"- Range set for IR sensor.
   "UNIT TYP" - Type of unit (REFRIG or NON-RFRG)
   "FLT SIZE" - Select filter capacity
   "RST BCNT" - Reset bottle count
   If the button is not pushed again the display will scroll through the four messages above for three cycles and return to run mode.
3) When display shows "RST BCNT" push program button once the display will show current value, e.g. "0033183".
4) Once display shows current value push the program button once more to reset back to 0. The display will show BTLCT = 0 for approximately 2 seconds and then return to run mode showing 00000000 bottles.
   NOTE: Once the bottle count is reset to zero there is no way to return to the previous bottle count.
5) Testing the bottle counter:
   REFRIG units: Place bottle or hand in front of sensor for approximately 9 seconds to see bottle counter count 00000001,
   (This is based on filling a 20 oz. bottle).
   NON-RFRG units: Place bottle or hand in front of sensor for approximately 6 seconds to see bottle counter count 00000001,
   (This is based on filling a 20 oz bottle).

SETTING FILTER CAPACITY

1) Depress the program button for approximately 2 seconds until the display changes then release. The display will change and scroll through two messages:
   "RST FLTR" – Reset Filter Status LED
   "SETTINGS" – System Settings Sub Menu
   If the program button is not pushed again the display will scroll through the two messages above for three cycles and then default back to bottle count and be back in run mode.
2) When the display changes to "SETTINGS", depress the button again. The display will change to show:
   "RNG SET"- Range set for IR sensor.
   "UNIT TYP" - Type of unit (REFRIG or NON-RFRG)
   "FLT SIZE" - Select filter capacity
   "RST BCNT" - Reset bottle count
   If the button is not pushed again the display will scroll through the four messages above for three cycles and return to run mode.
3) When display shows "FLT SIZE" push program button once. The display will show current value. Can be 3000GAL or 6000GAL.
4) Push program button again to display the desired "FLT SIZE".
5) Allow approximately 4 seconds to pass and the display will return to bottle counter and be in run mode.

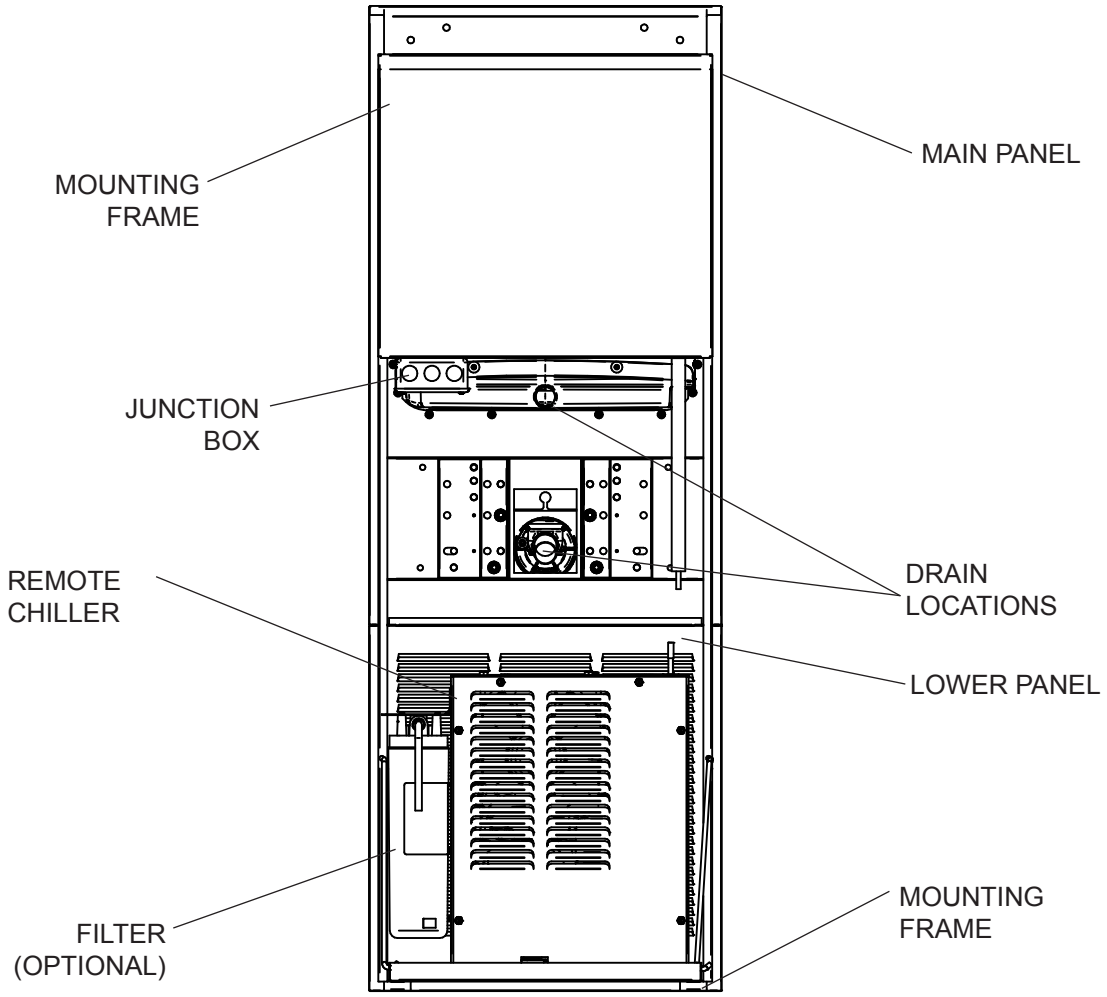

Figure 9

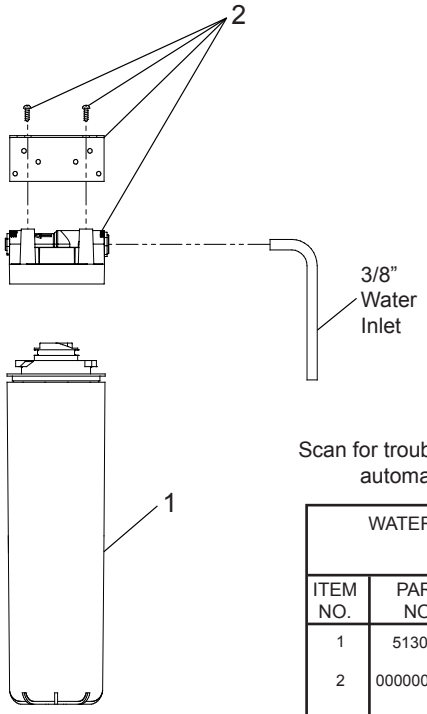

Figure 10

Scan for troubleshooting information and to subscribe to automatic filter replacements at a discount.

WATERSENTRY® PLUS FILTER PARTS LIST (See Fig. 10)		
ITEM NO.	PART NO.	DESCRIPTION
1	51300C	Filter Assy-3000 Gal.
2	0000000746	Assy-Filter & Brkt includes Fltr Head/Mtg Bkt/ John Guest Fittings/Screws

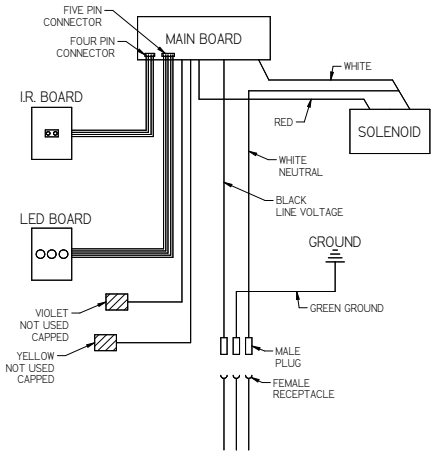

Figure 11

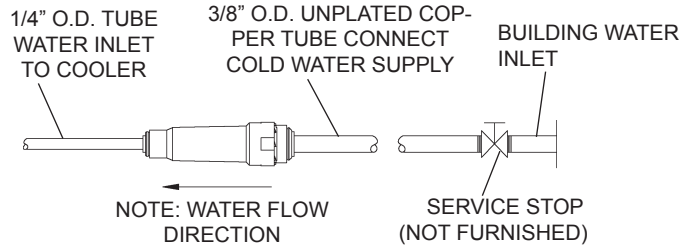

Figure 12 – Water Supply Connections

PARTS LIST		
ITEM NO.	PART NO.	DESCRIPTION
1	56073C	Kit - Bubbler Assy
2	28708C	Basin - Swirlflow
3	28473C	Lower Shell
4	45767C	Fountain Body
5	28343C	Cover Plate
6	45781C	Sleeve
7	98871C	Kit - Swirlflo Pushbutton/Spring
8	2000002461	Kit - Regulator Swirlflow
9	56163C	Gasket - Drain
10	0000000930	Assy - Drain/Tailpipe
11	45768C	Drain - Plug 1-1/2"
12	56092C	Poly Tubing (Cut To Length)
13	99003C	Reset Switch
14	55996C	Strainer (Provided with Chiller)
15	0000001144	Tee - 1/4 x 1/4 x 3/8
16	26833C	Lower Panel
17	111008343890	Screw - #10-24 x .62 HHSM
18	70432C	Screw - #8-32 x .38 THSM
19	38417001	Screw - #8-18 x .37 HHSM
20	75560C	Screw - 5/16-18 x 1.00 HHMS
21	75632C	Setscrew - #10-32 x .38
22	70817C	Fitting - Elbow 1/4 x 1/4
23	111577343890	Nut - Serrated Hex 5/16-18
24	28395C	Bracket - Support
25	70683C	Fitting - Union 1/4 x 1/4

BOTTLE FILLER REPLACEMENT PART KITS		
ITEM NO.	PART NO.	DESCRIPTION
26	98543C	Kit - Electrical Package
27	98544C	Kit - EE Sensor
28	2000000503	Kit - Bottle Filler Solenoid Valve 115V
29	98546C	Kit - Aerator Replacement
30	98549C	Kit - Hardware & Waterway Parts

Installation Package

The components for installation are packed in three separate boxes, regardless of the type of unit being installed. The boxes contain the following:

Box No. 1: Wall Frame(s)
Box No. 2: Remote Chiller, ECH8
Box No. 3: Fountain(s), Arm(s) and Panels

Additional materials, as noted in the Parts List, are also shipped in these boxes.

TROUBLESHOOTING & MAINTENANCE

Orifice Assembly: Mineral deposits on orifice can cause water flow to spurt or not regulate. Mineral deposits may be removed from the orifice by poking with a small round file not over 1/8" diameter, or using a small diameter wire.

CAUTION: DO NOT file or cut orifice material

Stream Regulator: If orifice is clean, regulate flow as in Step 14 of the installation instructions. If replacement is necessary, see parts list for correct regulator part number.

Actuation of Quick Connect Water Fittings: Cooler is provided with lead-free connectors which utilize an o-ring water seal. To remove tubing from the fitting, relieve water pressure, push in on the gray collar while pulling on the tubing. (See Fig. 13) To insert tubing, push tube straight into fitting until it reaches a positive stop (approximately 3/4").

OPERATION OF QUICK CONNECT FITTINGS

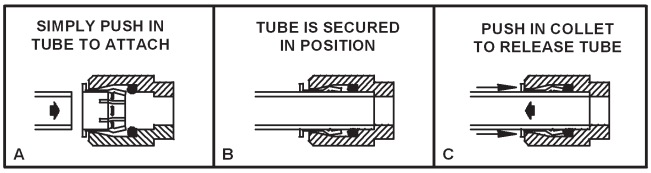

PUSHING TUBE IN BEFORE PULLING IT OUT HELPS TO RELEASE TUBE

Figure 13 – Quick Connect Fittings

1000002504

Patent zurnelkay.com/patents

PRINTED IN U.S.A.

FOR PARTS, CONTACT YOUR LOCAL DISTRIBUTOR OR CALL 1.800.834.4816
REPAIR SERVICE INFORMATION TOLL FREE NUMBER 1.800.260.6640

ELKAY MANUFACTURING Co. • 1333 BUTTERFIELD ROAD SUITE 200 • DOWNERS GROVE • IL 60515 • U.S.A 630.574.8484 • www.elkay.com