ELKAY®

Enhanced

INSTALLATION & USE MANUAL

LZ™ Series Bottle Filling Stations & Coolers

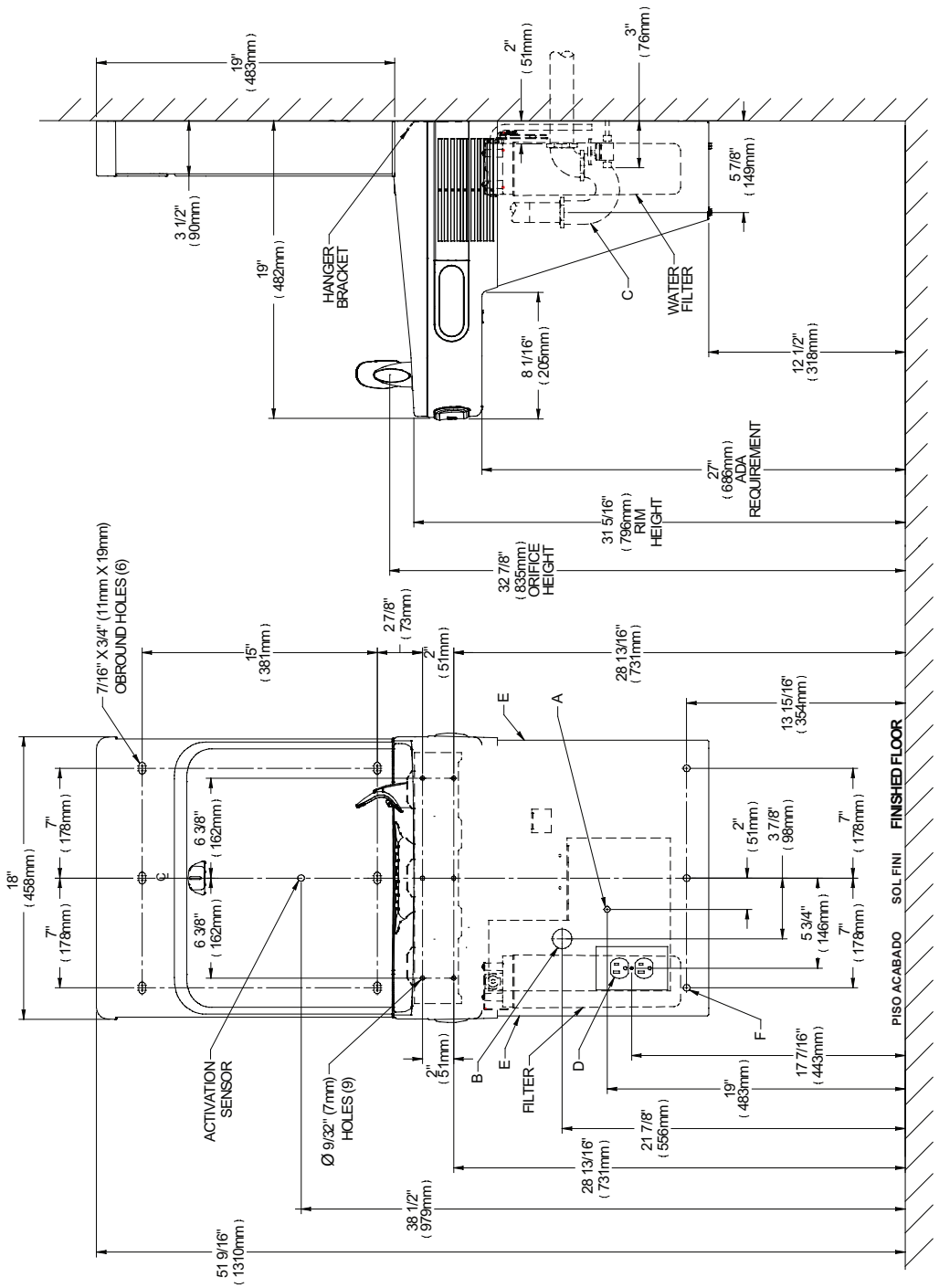

REDUCE HEIGHT BY 3 INCHES FOR INSTALLATION OF CHILDREN'S ADA COOLER

LEGEND/LEYENDA/LÉGENDE

A = RECOMMENDED WATER SUPPLY LOCATION 3/8 O.D. UNPLATED COPPER TUBE CONNECT STUB WITH SHUT OFF (BY OTHERS) 3 IN. (76mm) MAXIMUM OUT FROM WALL, MAXIMUM WATER SUPPLY PRESSURE: 105 PSI (0.73MPa)

B = RECOMMENDED LOCATION FOR WASTE OUTLET 1-1/4" O.D. DRAIN STUB 2 IN. OUT FROM WALL

C = 1-1/4" TRAP NOT FURNISHED

D = ELECTRICAL SUPPLY (3) WIRE RECESSED BOX DUPLEX OUTLET**

E = INSURE PROPER VENTILATION BY MAINTAINING 6" (152 mm) (MIN.) CLEARANCE FROM CABINET LOUVERS TO WALL.

F = 7/16 BOLT HOLES FOR FASTENING UNIT TO WALL

****NEW INSTALLATIONS MUST USE GROUND FAULT CIRCUIT INTERRUPTER (GFCI)**

NOTE: IT IS HIGHLY RECOMMENDED THAT THE CIRCUIT BE DEDICATED AND THE LOAD PROTECTION BE SIZED FOR 20 AMPS.

Fig. 1

HANGER BRACKET INSTALLATION

1) Remove hanger bracket fastened to back of cooler by removing one (1) screw.
2) Mount the hanger bracket as shown in Figure 1 (Pg. 2).

NOTE: Hanger Bracket MUST be supported securely. Add fixture support carrier if wall will not provide adequate support. Anchor hanger securely to wall using all six (6) 1/4 in. dia. mounting holes.

IMPORTANT: 5-7/8 in. (150mm) dimension from wall to centerline of trap must be maintained for proper fit.

INSTALLATION OF COOLER

3) Hang the cooler on the hanger bracket. Be certain hanger bracket is engaged properly in the slots on the cooler back as shown in Figure 1 (Pg. 2).
4) Remove the four (4) screws holding the lower front panel at the bottom of the cooler (See Fig 7, Pg.5). Remove the front panel by pulling straight down and set aside.
5) Secure cooler frame to wall by installing (2) screws and washers (not supplied). (See Fig. 2, Pg. 4). Make sure the screws engage in a structural member.
6) Connect the supply water to the filter inlet tube.
7) Install trap. Remove the slip nut and gasket from the trap and install them on the cooler waste line making sure that the end of the waste line fits into the trap. Assemble the slip nut and gasket to the trap and tighten securely.

IMPORTANT: If it is necessary to cut the drain, loosen the screw at the black rubber boot and remove tube, check for leaks after re-assembly.

BOTTLE FILLER INSTALLATION

8) Remove two (2) mounting screws with 5/32" Allen wrench holding bottle filler to wall mounting plate (See Fig.8, Pg. 5). Note do not discard mounting screws, they will be needed to secure bottle filler to wall mounting plate.
9) Remove wall mounting plate from Bottle Filler (see Fig 8, Pg. 5). Place wall mounting plate against wall on top of basin. Center the wall mounting plate side to side with the basin. Mark the six (6) mounting holes with a pencil. Place tape over wiring harnes conection on top of cooler to prevent debris from falling into Connection.
10) Remove wall mounting plate from wall. **NOTE**: Mounting plate **MUST** be supported securely. Add fixture support carrier if wall will not provide adequate support.
11) Install wall mounting plate to wall using six (6) 7/16" obround mounting holes (mounting bolts not included) (See Fig.8, Pg. 5). Use appropriate fasteners for your wall type.
12) Install gasket on bottom of bottle filler tower with gasket support bracket & (2) screws. (See Fig. 4, Pg. 4).
13) Route 3/8" tubing through the opening in the bottle filler gasket and plug into bulkhead fitting in basin. Route the wiring harness through the gasket and plug into the connector on the top of the basin.
14) Place bottle filler on four (4) hooks on the mounting plate installed on wall. Make sure round boss in gasket fits in hole of basin. (See Fig. 8, Pg. 5).
15) Plug electrical cord into outlet on wall.
16) Remove filter from carton, remove protective cap, attach filter to filter head by firmly inserting into head and rotating filter clockwise. Ensure that blue label can be read when filter is installed. (See Fig. 11, Pg. 7).
17) Turn water supply on and inspect for leaks. In both cooler and bottle filler. Fix all leaks before continuing.
18) Once cooler and bottle filter has been inspected for leaks and any leaks found corrected.
19) Reinstall two mounting screws from first step (See Fig. 8, Pg. 5). Caution, do not over tighten screws.
20) Once power is applied to the cooler the GREEN LED light will illuminate on the bottle filler showing good filter status along with the LCD Bottle Counter.
21) Verify proper dispensing by placing cup, hand, or any opaque object in front of sensor area and verify water dispenses. Note: the first initial dispenses might have air in line which may cause a sputter. This will be eliminated once all air is purged from the line.
22) Once unit tests out, install Lower Panel back on water cooler(s). Units are now ready for use.

Note: Danger! Electrical shock hazard. Disconnect power before servicing unit.

Instructions For Replacing Filters

1) Remove lower cover on cooler by removing (4) screws (See Fig.7, Pg. 5).
2) Turn off water supply; dispense water to relieve pressure.
3) Disconnect electrical power by unplugging unit's power cord.
4) Turn used filter counterclockwise 1/4 turn to remove from filter head.
5) Remove cap from new filter and use to seal used filter.
6) Insert new filter into existing filter head and turn fully clockwise. Make sure you can read the label on the front of the filter once it is installed. (See Fig.11, Pg. 7).
7) Connect electrical power by plugging in unit's power cord.
8) Turn on water supply and run a minimum of two gallons of water through the filter to purge air any fine carbon particles from filter. Also run water through bottle filler

Note: Filter status light will automatically reset once new filter is installed.

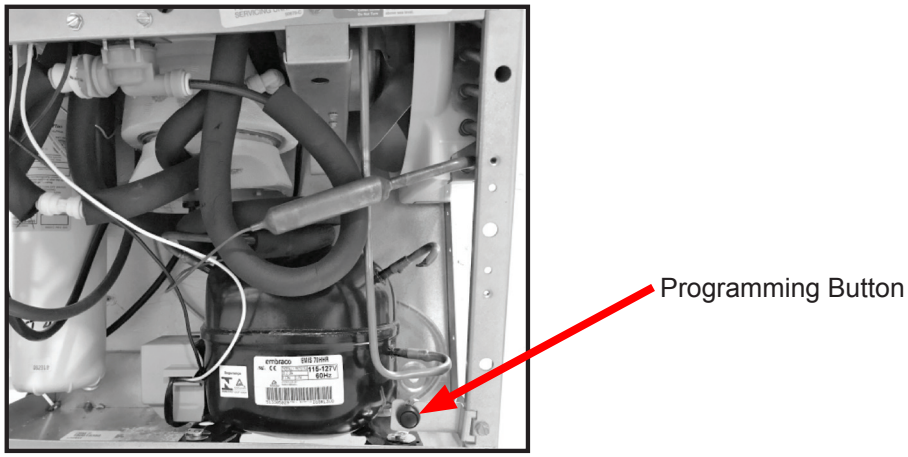

FIG. A

Instructions To Access Programming Button

1) Remove lower cover on refrigerated unit by removing (4) screws (See Fig 7, Pg 5).
2) Button is located in lower right corner of unit (See Fig. A, Pg. 3).

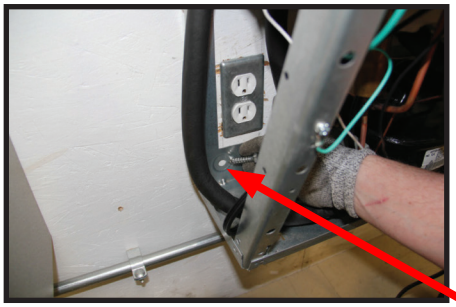

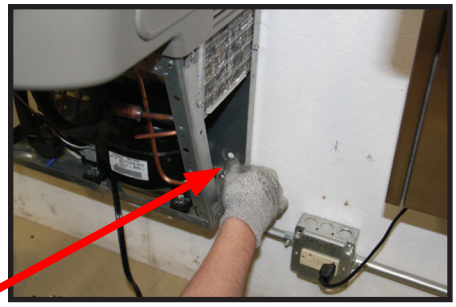

Secure cooler frame to wall by installing (2) screws and washers (not supplied).

FIG. 2 **FIG. 3**

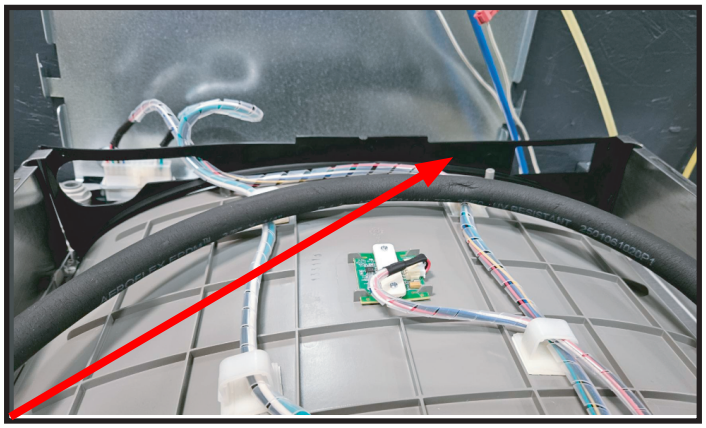

Lay gasket along back of bottle filler mounting plate. Align BF and lay on cooler basin.

Fig. 4

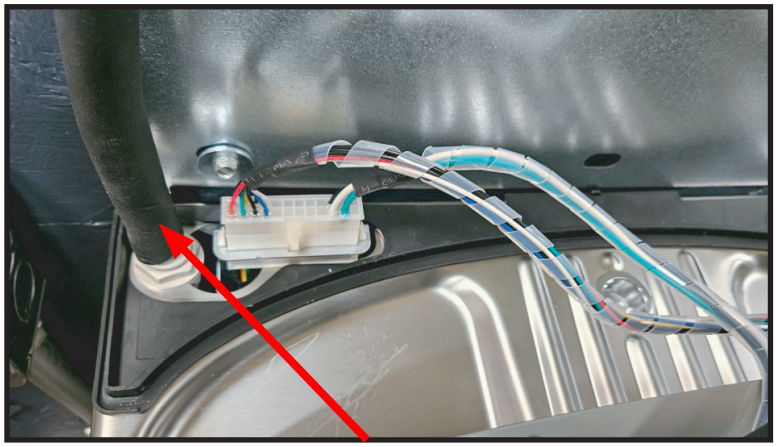

Attach the 3/8 water line into the bulkhead fitting.
(Gasket removed from bottle filler for clarity)

Fig. 5

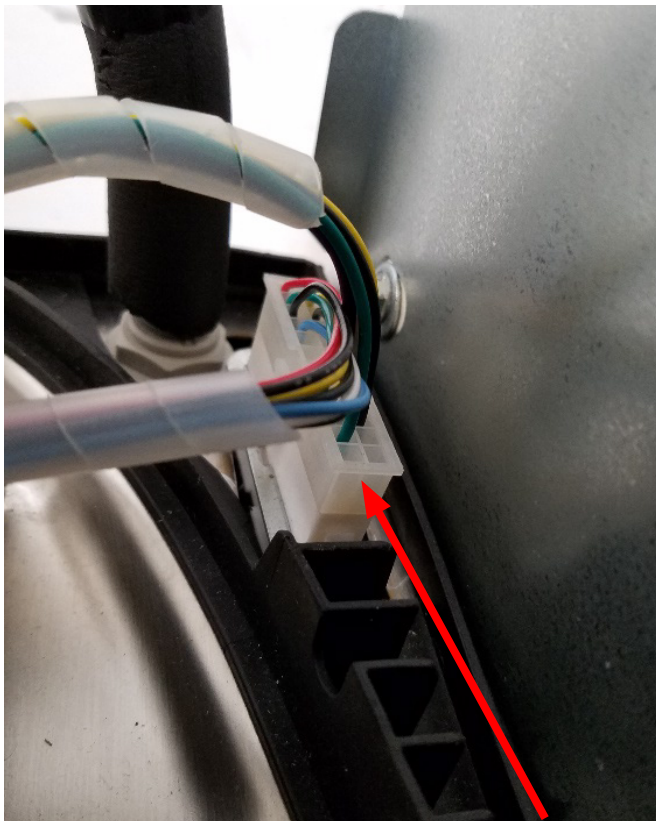

Connect the bottle filler electrical harness.
(Gasket removed from bottle filler for clarity)

Fig. 6

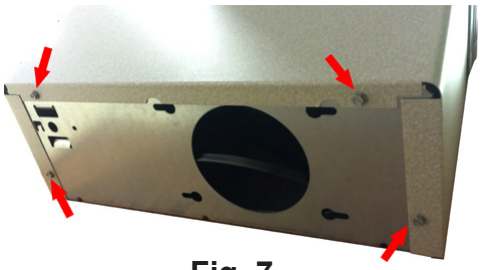

Fig. 7

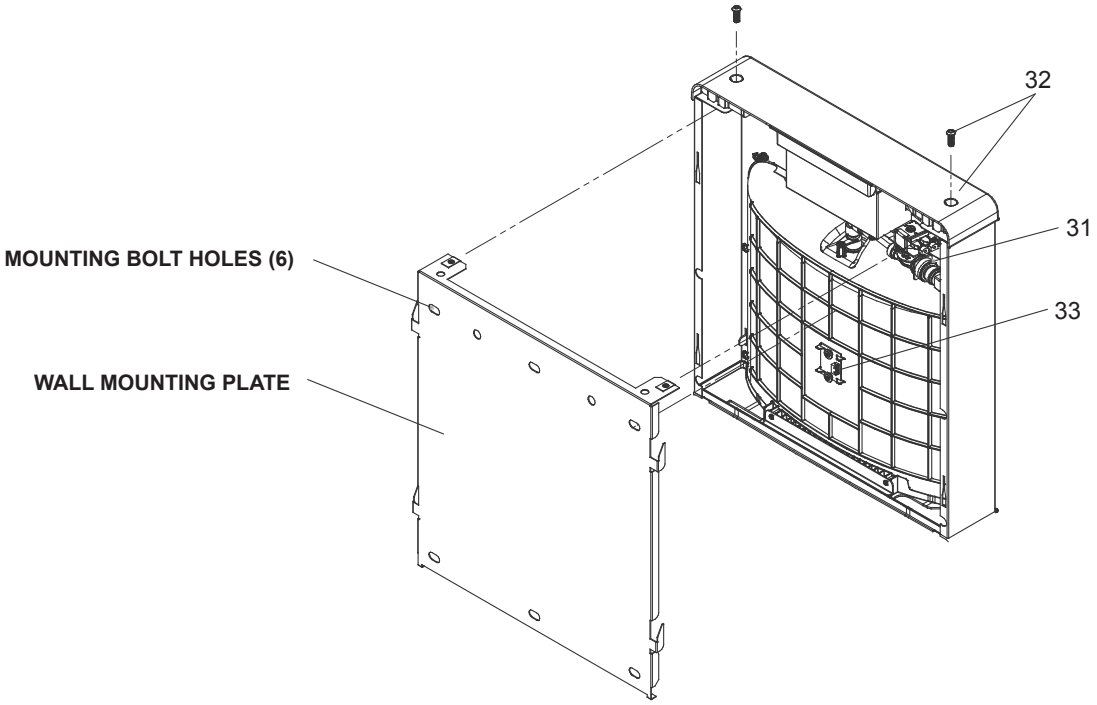

BOTTLE FILLING UNIT

Fig. 8

115V Refrigerated Wiring Diagram with Alpha/Numeric Display

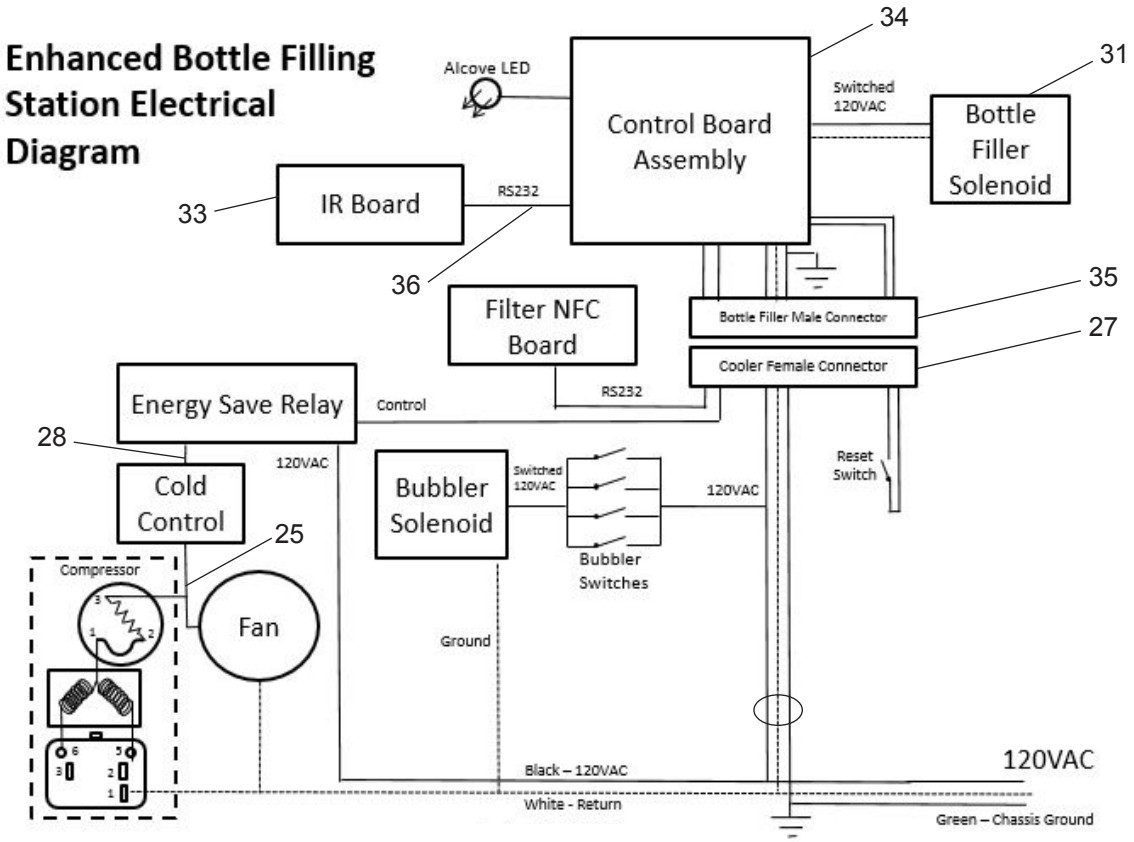

Fig. 9

⚠ WARNING

- **INGESTION HAZARD:** This product contains a button cell or coin battery.
- **DEATH** or serious injury can occur if ingested.
- A swallowed button cell or coin battery can cause **Internal Chemical Burns** in as little as **2 hours.**
- **KEEP** new and used batteries **OUT OF REACH of CHILDREN**
- **Seek immediate medical attention** if a battery is suspected to be swallowed or inserted inside any part of the body.

OPERATION OF QUICK CONNECT FITTINGS

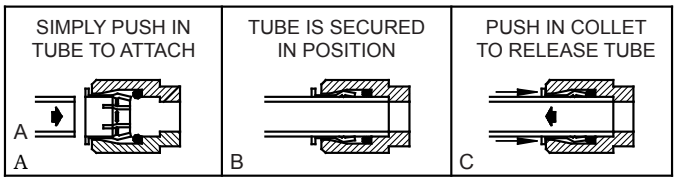

Fig. 10

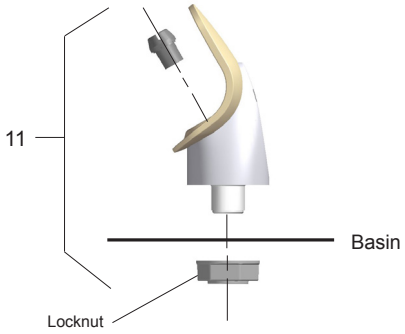

BUBBLER DETAIL

Fig. 11

NOTE:
When installing replacement bubbler and pedestal, tighten nut only to hold parts snug in position. Do Not Overtighten.

Scan for trouble shooting and to sign up for auto replenishment of authentic Elkay filters.

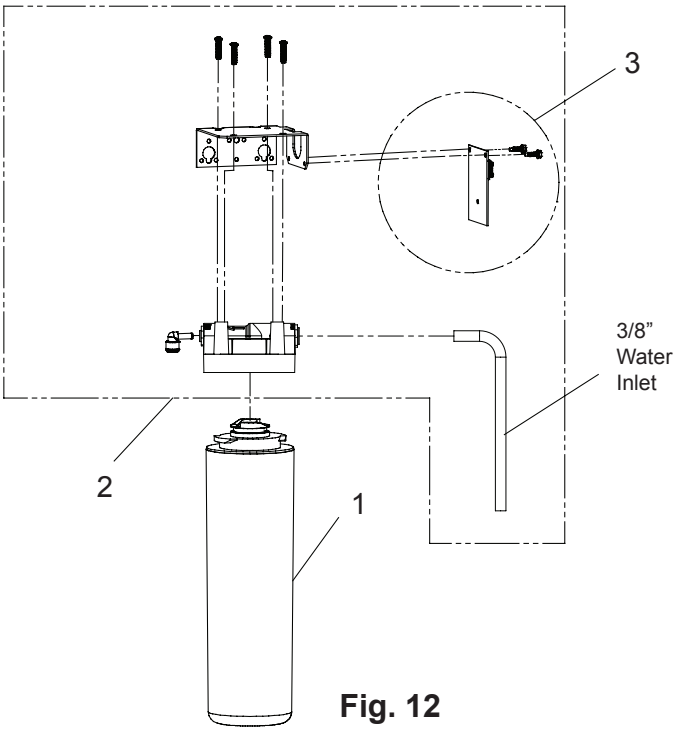

Fig. 12

Filter Detail

FILTER PARTS LIST		
ITEM NO.	PART NO.	DESCRIPTION
1	51300C	Filter Assy - 3000 Gal.
2	1000005214	Kit - Filter Head Fittings includes John Guest Fittings & 3/8” Elbow Filter Bracket/Screws
3	1000004409	Kit - NFC Board/Cover

Service Instructions

Lower and Upper Shroud

To access the refrigeration system and plumbing connections, remove four screws from bottom of cooler to remove the lower shroud. To remove the upper shroud for access to the pushbars, regulator, solenoid valve or other components located in the top of the unit, remove lower shroud, disconnect drain, remove four screws from tabs along lower edge of upper shroud, unplug two wires and water tube.

Bubbler

To remove the bubbler, first disconnect the power supply. The underside of the bubbler can be reached through the access panel on the underside of the upper shroud. Remove the access panel by removing the retaining screw. To remove the bubbler, loosen locknut from the underside of the bubbler and remove the tubing from the quick connect fitting per the Operation Of Quick Connect Fittings section in the General Instructions. After servicing, replace the access panel and retaining screw.

Switches Behind the Push Bar

The regulator in an EZ cooler is always held fully open by the use of a single regulator nut (See Item 9, Fig. 14). Water is not dispensed until the pushbar is depressed to activate a switch which then opens a solenoid valve.

To remove sidebars, from the inside compress the flared tabs and pull out carefully. To reinstall side pushbars, the front of the pushbar is inserted first. While keeping the switch depressed, snap the rear of the pushbar into position.

Cleaning

Stainless Steel

- General cleaning: use an ordinary mild detergent and soft cloth, rinse and towel dry.
- Steel soap pads should never be used; particles can adhere to a stainless steel basin surface and will eventually rust.
- Light scratches are normal for stainless steel basins; over time they will blend into the uniform finish pattern.

Plastic Components

- General cleaning: use an ordinary mild detergent and soft cloth, rinse and towel dry.
- Wiping the surface clean to remove debris or build up will not hurt the antimicrobial properties.

Temperature Control

- Factory set at 50°F (+/- 5°F) under normal conditions. For temperature adjustments, refer to sticker on left side of top bar.

Stream Height Adjustment

VIEW OF UNDERSIDE OF BASIN SHROUD

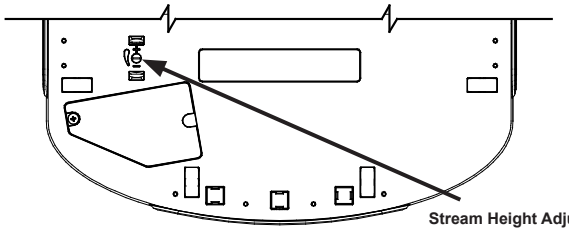

Stream Height Adjustment Location

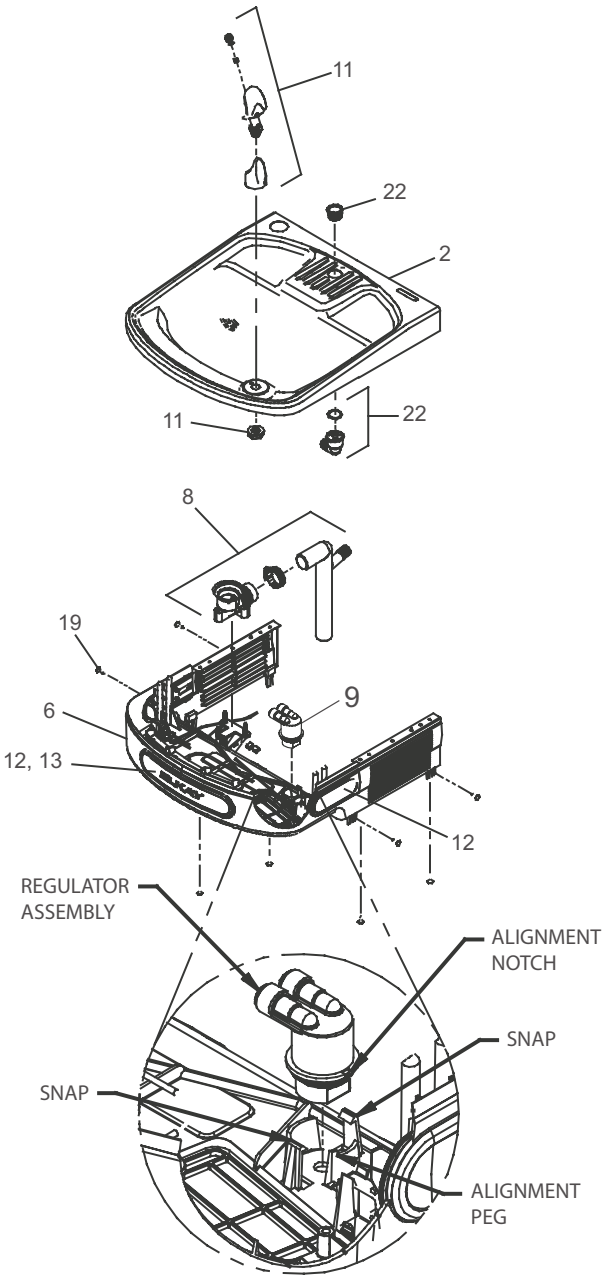

Fig. 13

Programming Instruction

Depress Button for 3 seconds to activate main menu - release

Cycles thru main menu items 2 seconds each for 2 cycles then exits menu unless selected

Cycles thru sub menu items 2 seconds each for 2 cycles then returns to main menu unless selected

Selections are saved when the menu is exited

Top level	Action	Sub Menu 1	Action	Sub Menu/action	Action	Sub Menu/ action	Action	Sub Menu/ action	Notes	End Action
Info	Momentary	Scrolls through all the settings on unit								Returns to Main Menu
Info	Momentary	Flashes error code								Returns to Main Menu
Set time	Momentary									Drops to next level when selected
		Day (Sunday-Saturday	Momentary						Use push button to select the day on the display	Drops to next level when selected
		AM/PM	Momentary						Use push button to select AM or PM	Drops to next level when selected
		Hour (12 hour)	Momentary						Use push button to select Hour	Drops to next level when selected
		Min 0-69 in 5 minute increments	Momentary						Use push button to select closest minute	Returns to Main Menu
Filter	Momentary									Drops to next level when selected
		No	Momentary	Turn off filter status and erros					No Filter unit - Error codes related to filter status turned off	Returns to Main Menu
		Yes	Momentary	Default setting - Turn on filter status and errors					Filter status has default ON / Default has read write to filter, LED status display, filter error capability	Returns to Main Menu
Refrig	Momentary									Drops to next level when selected
		No	Momentary	Turns off power to E/S relay sets bottle fill time to 1.5gpm					Refrigeration off	Returns to Main Menu
		Yes	Momentary	Default setting - Turns on power to E/S relay - sets time to 1.1gpm					Refrigeration on	Returns to Main Menu
Range	Momentary								The lower the number, the closer to the sensor the bottle needs to be to activate	Drops to next level when selected
		1-10	Momentary	Default setting 5 - Adjusts distance from sensor the bottle needs to be before turning before turning on or off the bottle filler						Returns to Main Menu
B-Light	Momentary								The settings are for the brightness of the display and night light	Drops to next level when selected
		25%	Momentary							Returns to Main Menu
		50%	Momentary							Returns to Main Menu
		75%	Momentary	Default Setting						Returns to Main Menu
		100%	Momentary							Returns to Main Menu
EnerSave	Momentary									Drops to next level when selected
		Off	Momentary	Default Setting						Returns to Main Menu
		On	Momentary	Set Energy Save Schedule						Drops to next level when selected
						Select Weekday				Drops to next level when selected
							Momentary	Select time on	24 hours – 1-12AM and 1-12PM	Drops to next level when selected
							Momentary	Select time off	24 hours – 1-12AM and 1-12PM	Drops to next level when selected
						Select Weekend				Drops to next level when selected
							Momentary	Select time on	24 hours – 1-12AM and 1-12PM	Drops to next level when selected
							Momentary	Select time off	24 hours – 1-12AM and 1-12PM	Returns to Main Menu

Enhanced EZH2O Error Codes

Error Code	Error Description	Corrective Action
	Bottle filler area obstructed	• Remove obstruction. • Clean lens on IR sensor • Unplug unit for at least 30 seconds and restart • If error repeats, replace IR sensor
E013	Missing or Incomplatible Filter	• Check that filter is installed correctly (label facing forward, white tag facing back) • Unplug unit for at least 30 seconds and restart • Replace filter • Replace filter head assembly with repair kit • If error repeats, contact certified service professional
E013 & E014	Missing NFC Board	• Unplug unit for at least 30 seconds and restart • Verify cable connector is plugged into NFC board on filter head assembly • Replace filter head assembly with repair kit • If error repeats, contact certified service professional

Pictured is unit only without bottle filler.

Note: Danger! Electrical shock hazard. Disconnect power before servicing unit.

Uses HFC-134A refrigerant

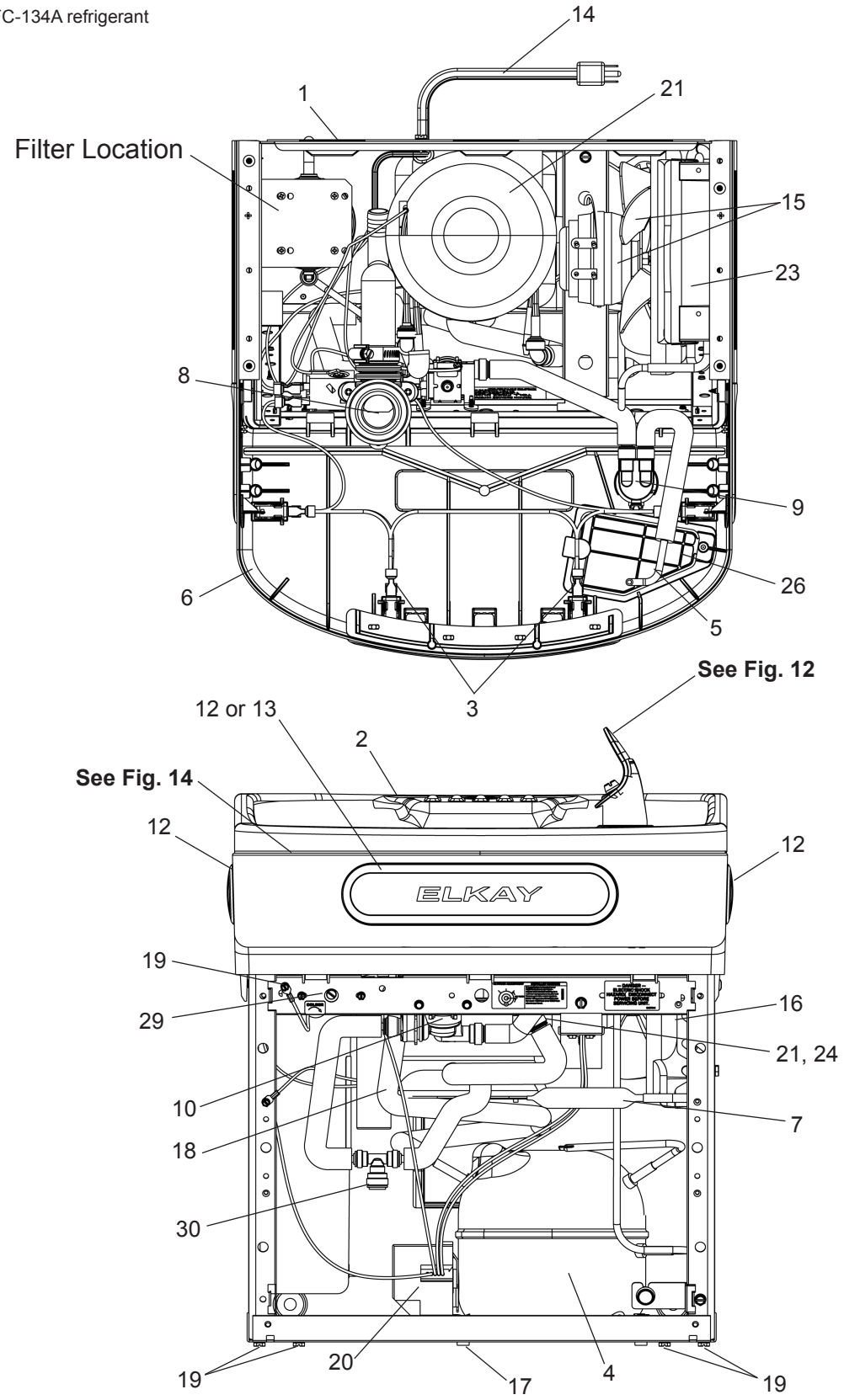

Fig. 14

115V PARTS LIST

ITEM NO.	PART NO.	DESCRIPTION
1	28401C	Hanger Bracket
2	0000001337	Basin - Stainless Steel
3	36216C	Wiring - Front/Side Push Bar
*4	36322C	Compr - Service Pak 115V EMIS70HHR
5	56092C	Tube - Poly (72”)
6	56229C	Assy - Shroud - Upper (Front Side Push)
7	66703C	Drier
8	1000001877	Kit - Drain Replacement (Bottle Filler) (Bracket, Tube, Fitting, Clamp)
9	1000004564	Kit - Regulator Assembly
10	1000004572	Kit - Solenoid Valve/Regulator Assembly
11	56073C	Kit - Flexi Bubbler/“O”-Ring/Nut
12	98734C	Kit - Pushbar (Front/Side) EZS TL
13	1000001600	Kit - Pushbar (Front Only)
14	1000004568	Power Cord
15	98775C	Kit - Fan Motor/Blade/Screws/Nut
16	98776C	Kit - Condenser/Drier/Wire Ties
17	98777C	Kit - Compr Mtg Hdwe/Grommets/Clips/Studs
18	98778C	Kit - Heatx/Drier
19	98898C	Kit - Hardware
20	0000000238	Kit - 115V Electricals (Relay, Overload, Cover)
21	98724C	Kit - Evap. Replacement
22	1000001812	Kit - Bottle Filler Drain
23	56237C	Shroud
24	1000001602	Kit - 75583C Elbow 5/16" x 1/4" (3 Pack)
25	1000004559	Wire Assy - Jumper
26	56213C	Access Panel
27	1000004547	Harness - Cooler
28	1000004550	Wire - 6” Jumper
29	98773C	Kit - Cold Control
NS	27416C	Wrapper Stainless Steel
NS	27413C	Wrapper Light Grey

NS = Not Shown

***INCLUDES RELAY & OVERLOAD. IF UNDER WARRANTY, REPLACE WITH SAME COMPRESSOR USED IN ORIGINAL ASSEMBLY.**
NOTE: All correspondence pertaining to any of the above water coolers or orders for repair parts MUST include Model No. and Serial No. of cooler, name and part number of replacement part.

ATTENTION:

If the product serial number is before 190424189, please refer to archived documents section of Elkay.com for the most accurate parts list. (www.elkay.com/archived-documents)

BOTTLE FILLER REPLACEMENT PART KITS

ITEM NO.	PART NO.	DESCRIPTION
NS	98546C	Kit - Aerator Replacement
30	98549C	Kit - Hardware & Waterway (BF)
31	1000004573	Kit - Solenoid 120V (BF)
NS	1000005077	Nameplate - Elkay Filtered
32	1000002433	Kit - Top Cover Assy (BF)
33	1000005219	Kit - IR Sensor K+
34	1000004544	Kit - Alpha Numeric LED Board
NS	2000001488	Kit - Tower/Basin Gasket
35	1000004546	Harness - Bottle Filler
36	1000004549	Harness - LED/IR Board

NS = Not Shown

FCC COMPLIANCE STATEMENT
CAUTION: Changes or modifications not expressly approved could void your authority to use this equipment
This device complies with Part 15 of the FCC Rules. Operation to the following two conditions: (1) This device may not cause harmful interference, and (2) this device must accept any interference received, including interference that may cause undesired operation

INDUSTRY CANADA STATEMENT
This device complies with Industry Canada license-exempt RSS standard(s). Operation is subject to the following two conditions: (1) this device may not cause interference, and (2) this device must accept any interference, including interference that may cause undesired operation of the device.

Le présent appareil est conforme aux CNR d’Industrie Canada applicables aux appareils radio exempts de license. L’exploitation est autorisée aux deux conditions suivantes : (1) l’appareil ne doit pas produire de brouillage, et (2) l’utilisateur de l’appareil doit accepter tout brouillage radioélectrique subi, même si le brouillage est susceptible d’en compromettre le fonctionnement.

1000004538

Patent zurnelkay.com/patents

FOR PARTS, CONTACT YOUR LOCAL DISTRIBUTOR OR CALL 1.800.834.4816

PRINTED IN U.S.A.

REPAIR SERVICE INFORMATION TOLL FREE NUMBER 1.800.260.6640

ELKAY MANUFACTURING Co. • 1333 BUTTERFIELD ROAD SUITE 200 • DOWNERS GROVE • IL 60515 • USA 630.574.8484 • www.elkay.com