ELKAY®

Installation and Use Manual

EMABFWS-RF and LMABFWS-RF Retrofit Bottle Filling Stations

IMPORTANT

THIS IS AN INDOOR APPLICATION ONLY.
ALL SERVICE TO BE PERFORMED BY AN AUTHORIZED SERVICE PERSON.

TOOLS REQUIRED

BUT NOT PROVIDED:W

SAFETY GLASSES
GLOVES
ELECTRIC DRILL
3/4” WRENCH OR CRESCENT WRENCH
UTILITY KNIFE
TAPE MEASURE
PENCIL
5/32” ALLEN WRENCH

IMPORTANT! INSTALLER PLEASE NOTE.

THE GROUNDING OF ELECTRICAL EQUIPMENT SUCH AS TELEPHONE, COMPUTERS, ETC. TO WATER LINES IS A COMMON PROCEDURE. THIS GROUNDING MAY BE IN THE BUILDING OR MAY OCCUR AWAY FROM THE BUILDING. THIS GROUNDING CAN CAUSE ELECTRICAL FEEDBACK INTO A FOUNTAIN, CREATING AN ELECTROLYSIS WHICH CAUSES A METALLIC TASTE OR AN INCREASE IN THE METAL CONTENT OF THE WATER. THIS CONDITION IS AVOIDABLE BY USING THE PROPER MATERIALS AS INDICATED. ANY DRAIN FITTINGS PROVIDED BY THE INSTALLER SHOULD BE MADE OF PLASTIC TO ELECTRICALLY ISOLATE THE FOUNTAIN FROM THE BUILDING PLUMBING SYSTEM. WE SUGGEST THAT THE BOTTLE FILLING STATION AND WATER COOLER BE PROTECTED BY A GROUND FAULT CIRCUIT INTERRUPTER (GFCI).

INSTALLER

EMABF / LMABF Bottle Fillers are among the easiest to install on the market today. To insure you install these models easily and correctly, PLEASE READ THESE SIMPLE INSTRUCTIONS BEFORE STARTING THE INSTALLATION. CHECK YOUR INSTALLATION FOR COMPLIANCE WITH PLUMBING, ELECTRICAL, AND OTHER APPLICABLE CODES. After installation, leave these instructions with the Fountain for future reference.

1000004724 (Rev. C - 04/26)

Note: Danger! Electrical shock hazard. Disconnect power before servicing unit.

WATER COOLER PREPARATION

NOTE:

- **On Two Level Models, the Bottle Filling Unit can be mounted on either higher or lower unit.**

Remove Front Panel

1) Remove Front Panel

- *Remove lower front panel of water cooler by removing the four (4) screws, two at top and two at bottom. On Two Level Models, remove both front panels.*
- *WARNING: Before proceeding. Disconnect electrical power supplying the water cooler. Switch circuit breaker "OFF" or remove fuse.*
- *Unplug water cooler power cord from electrical outlet.*
- *Shut off water supply.*

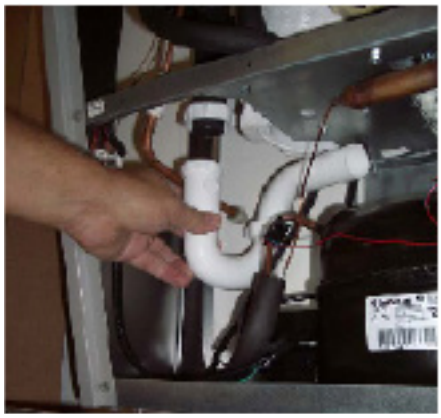

Loosen Drain Line

2) Loosen Drain Line

- Loosen Slip-Joint Nut at P-trap.
- Note: Have container/bucket readily available to catch water from lines.

Remove Basin Fasteners

3) Remove Basin Fasteners

- Remove Basin Assembly from unit by loosening eight (8) screws, four on each side of basin.

Remove Bubbler Water Line

4) Remove Bubbler Water Line

- Disconnect water line from bubbler.

WATER COOLER PREPARATION

5) Lift and Remove Basin.

- Remove basin assembly by lifting straight up, disconnecting the drain line from the P-trap.

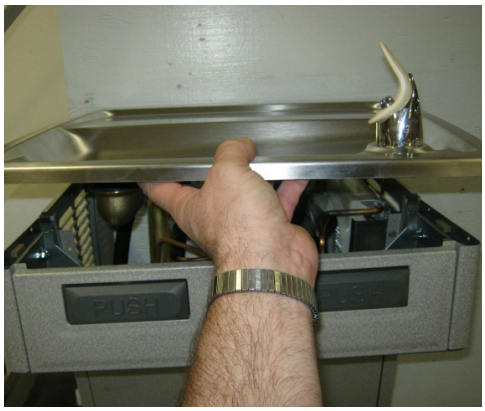

Lift and Remove Basin.

6) Assemble Drain hardware.

- Remove drain hardware from original basin
- Remove the protective covering from the basin.
- Reinstall the drain elbow, drain plug, and strainer plate onto the new basin
- Attach the new drain hardware onto the new basin.

Exchange Drain hardware.

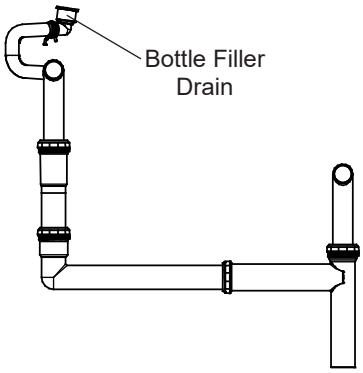

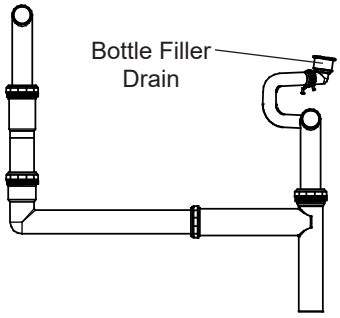

7) Exchange Bubbler hardware.

- Remove bubbler hardware from original basin.
- Reinstall the bubbler hardware on to the new basin.
- Ensure the bubbler is properly positioned with the stream falling onto the center of splash ridge.

Exchange Bubbler hardware.

EWF3000 WATERSENTRY® PLUS FILTER INSTALLATION (WITH FILTER)

WARNINGS:

- Do not use with water that is microbiologically unsafe or of unknown quality. For potable water only.
- Do not use with a hot water supply. Rated for water temperature: 33°-100°F(2°-38°C)
- Water line pressure must not exceed 100psi(690kPa). Use an inline water pressure regulator before filter to limit maximum pressure. Rated water supply pressure: 20-100psi(138-690kPa).
- Filter kits must be installed in compliance with all state and local laws and regulations governing the installation and use of this product.
- **NOTE:** If existing plumbing rough-in locations (Drain, Water In, and Electric Supply) do not allow the filter to be mounted inside the cooler cabinet the filter can be installed horizontally below the unit. A retrofit kit is available to mount the filter beneath the cooler.

NOTE:

- Ends of tubing must be cut square and free of burrs and sharp ends that could cut or nick the o-rings.
- Loosen the locknut and push tube end past both o-rings to a positive stop in the filter head recess approx. 1".
- Locknut may have to be backed out a little more. Screw the locknut hand tight to seal.

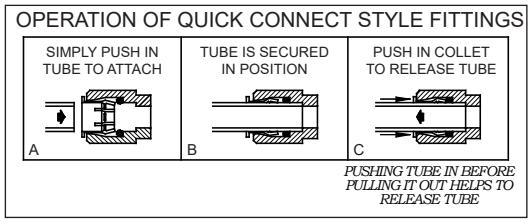

Attach water-in copper tube to Filter Head inlet

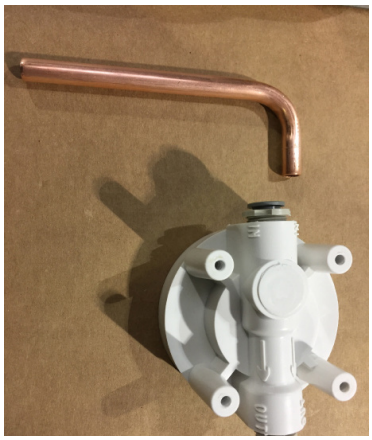

1) **Attach port fittings onto Filter Head:**
   - Note: Refer to photos at left for proper alignment.
   - Insert 3/8” 90° Quick Connect elbow fitting into Superseal IN port,
   - Insert 1/4” poly tube into Superseal OUT port. If necessary, insert a 1/4” x 90° Elbow.
   - Adjust and tighten port fittings.

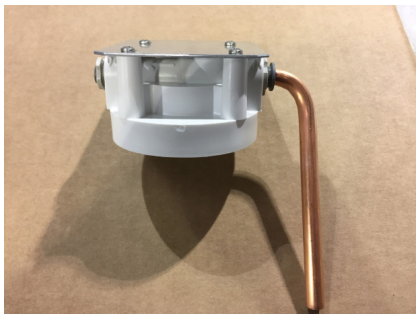

Single Level Models

2) Attach Filter head assembly.
   - If not already preassembled. Attach Filter head assembly to filter mounting bracket with four(4) screws supplied.

     - Single Level Models
     - Mount with 3/8” inlet on Right Side

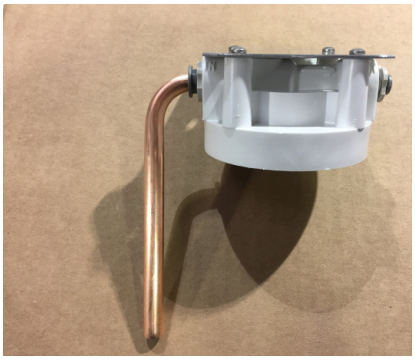

Two Level Models

- Two Level Models
- Mount with 3/8” Inlet on Left Side

EWF3000 WATERSENTRY® PLUS FILTER INSTALLATION (WITH FILTER)

3) Mount Filter Head Assembly
Mount Filter Head Assembly into Cooler.
Unit with single supplied screw:

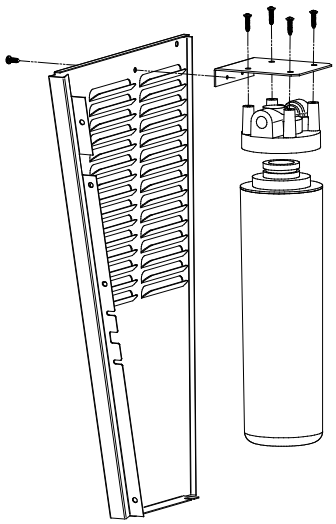

Single Level Models

- Single Level Models
- Mount on inside of left panel butted up against top lip.
- NOTE: The filter bracket is mounted with a single screw.

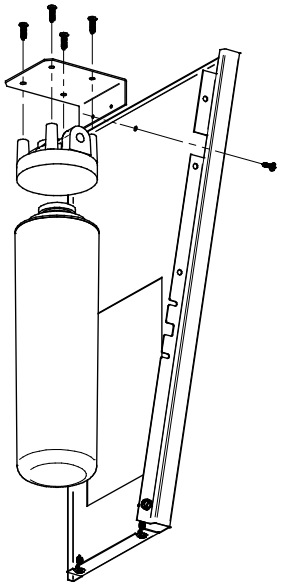

Two Level Models

- Two Level Models
  - Mount in left hand cooler on the inside of the right panel, butted up against the top lip.
- NOTE: The filter bracket is mounted with a single screw.

Fig. 1

RE-PLUMBING SINGLE STATION WATER CIRCUITS (NON-FILTER)

CAUTION:

- This procedure MUST be performed on ALL SINGLE ELKAY WATER COOLERS or the bottle filling unit WILL NOT perform properly!
- When disconnecting water lines use a container to catch any water running out of the lines.

1) Connect Water Supply:

- Remove the in-line strainer outlet tube from the Regulator Inlet.
- Remove the 1/4” copper tubing from the Regulator Outlet.
- Connect the in-line Strainer Outlet using 1/4” poly tubing to the Evaporator 1/4” copper inlet using the supplied 1/4” union.

2) Add water supply to Bottle Filler:

- Cut the Evaporator outlet 1/4” poly tubing 6” from the Evaporator Outlet and insert the 1/4” Tee fitting between the two pieces.
- Connect Bottle Filler supply line to tee fitting.
- Remove 1/4” poly tubing from Bubbler.

3) Re-route water supply to Regulator Inlet:

- Insert end of 1/4” poly tubing from the Tee fitting to the Regulator Inlet which is marked with the word “IN” on the regulator.

4) Connect water supply from Regulator to Bubbler:

- Cut a 12” piece of 1/4” poly tube along with matching length of insulation.
- Insert 1/4” poly tube into insulation.
- Insert 1/4” poly tube into the Regulator Outlet (unmarked).
- Opposite end of 1/4” poly tube will be inserted later into the Bubbler.

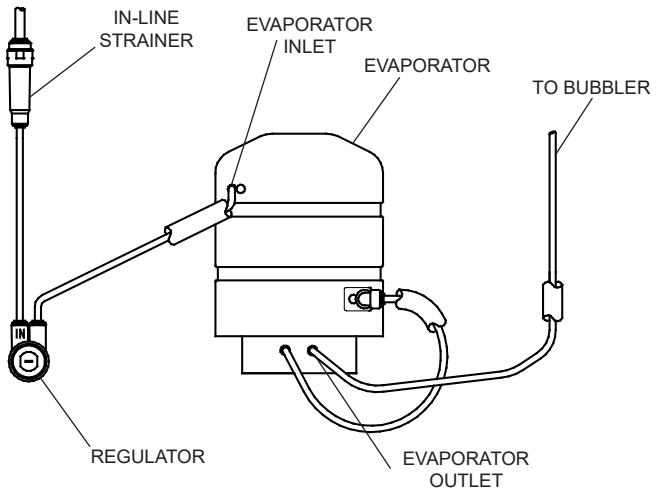

STANDARD EMABF PLUMBING

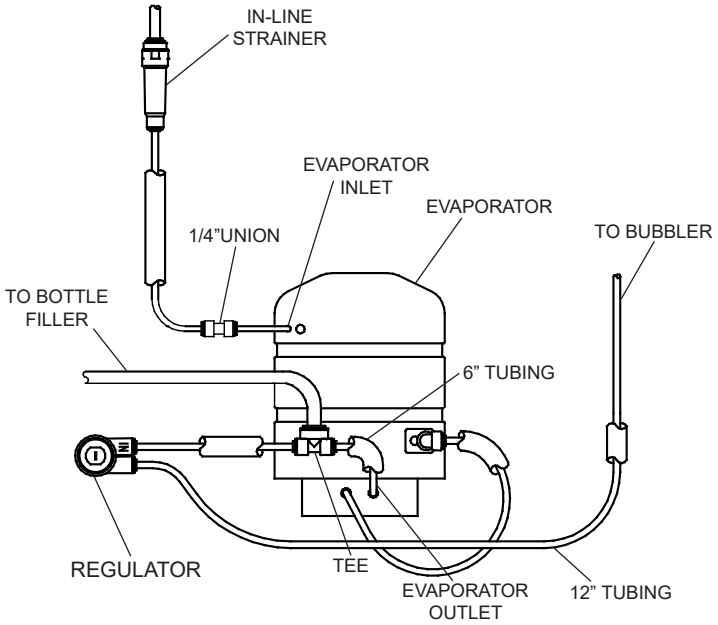

EMABF(WS) PLUMBING

OPERATION OF QUICK CONNECT STYLE FITTINGS

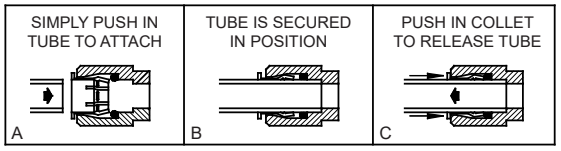

PUSHING TUBE IN BEFORE PULLING IT OUT HELPS TO RELEASE TUBE

Fig. 2

RE-PLUMBING SINGLE STATION WATER CIRCUITS (WITH FILTER)

CAUTION:

- This procedure MUST be performed on ALL SINGLE ELKAY WATER COOLERS or the bottle filling unit WILL NOT perform properly!
- When disconnecting water lines use a container to catch any water running out of the lines.

1) Connect Water Supply From Filter to Evaporator :

- Remove the in-line strainer outlet tube from the Regulator Inlet.
- Remove the 1/4" copper tubing from the regulator Outlet.
- Connect the Filter outlet using 1/4” poly tubing to the Evaporator 1/4” copper inlet using the supplied 1/4” union.

2) Add water supply to Bottle Filler:

- Cut the Evaporator Outlet 1/4” poly tubing 6” from the Evaporator Outlet and insert the 1/4” Tee fitting between the two pieces.
- Connect Bottle Filler supply line to Tee fitting.
- Remove 1/4” poly tubing from Bubbler.

3) Re-route water supply to Regulator:

- Insert end of 1/4” poly tubing from the Tee fitting to the Regulator Inlet. which is marked with the word “IN” on the Regulator.

4) Connect water supply from Regulator to Bubbler.

- Cut a 12” piece of 1/4” poly tube along with matching length of insulation.
- Insert 1/4” poly tube into insulation.
- Insert 1/4” poly tube into the Regulator Outlet (unmarked).
- Opposite end of 1/4” poly tube will be Inserted later into the Bubbler.

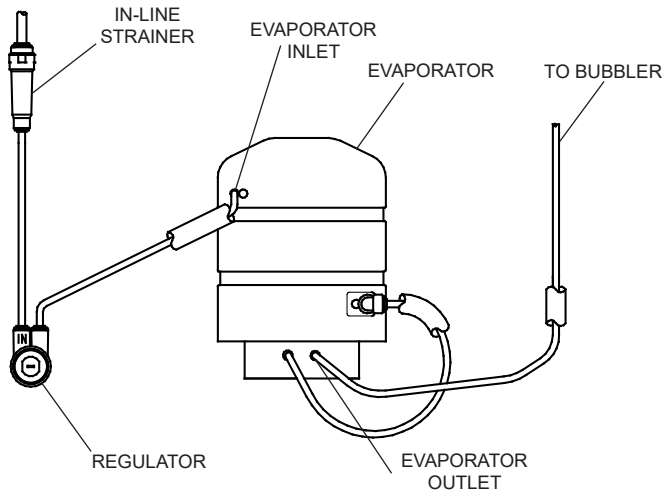

STANDARD EMABF PLUMBING

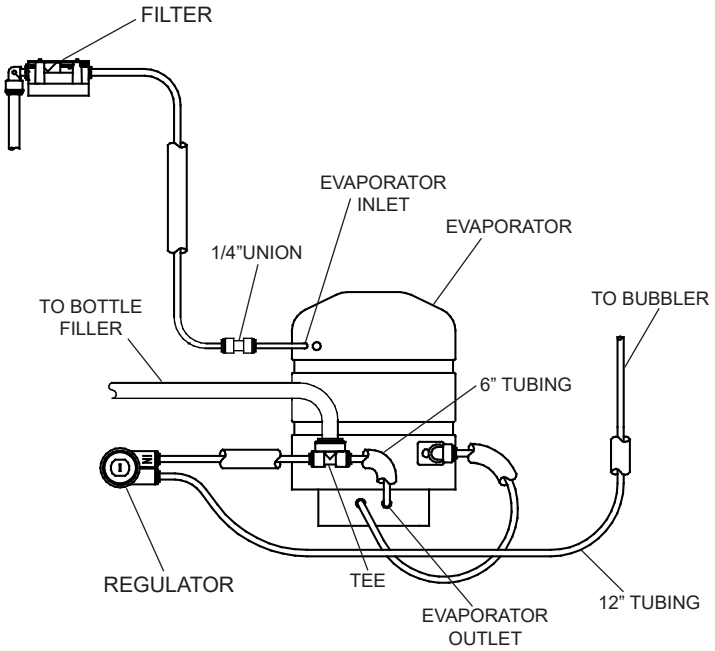

LMABF(WS) PLUMBING

Fig. 3

RE-PLUMBING TWO LEVEL STATION WATER CIRCUITS (NON-FILTER)

CAUTION:

- This procedure MUST be performed on ALL TWO LEVEL ELKAY WATER COOLERS or the bottle filling unit WILL NOT perform properly!
- When disconnecting water lines use a container to catch any water running out of the lines.

1) Add water supply to Bottle Filler to be located on LH unit:

- In the left hand unit, cut the Evaporator outlet 1/4” poly tubing approx. 5” from the access opening between the units, insert the 1/4” Tee fitting between the two pieces and connect 3/8” water line to tee.

2) Add water supply to Bottle Filler to be located on RH unit:

- In the right hand unit, cut the Evaporator outlet 1/4” poly tubing approx. 2” from the access opening between the units, insert the 1/4” Tee fitting between the two pieces and connect 3/8” water line to tee.

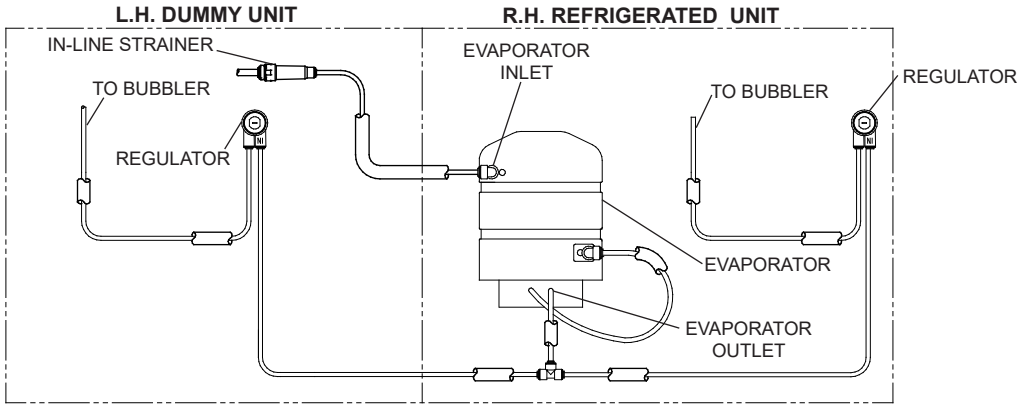

STANDARD EMABF TWO LEVEL PLUMBING WITHOUT BOTTLE FILLER

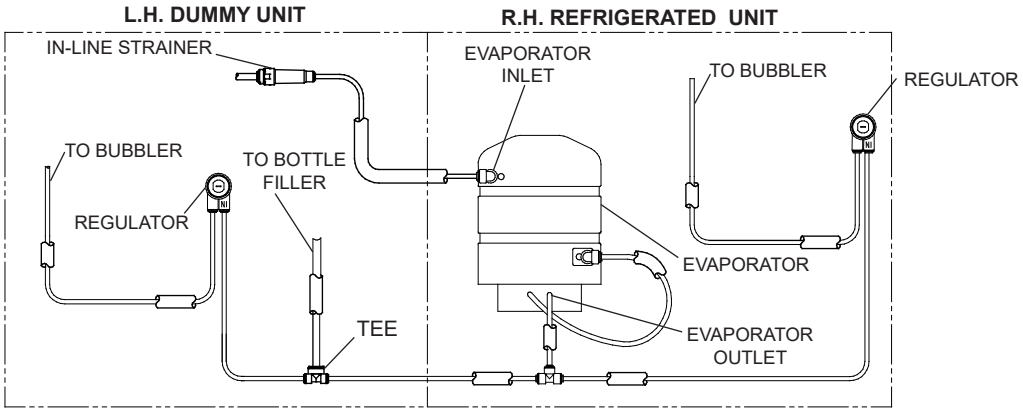

EMABF(WS) TWO LEVEL PLUMBING BOTTLE FILLER ON LH SIDE (SEE NOTE 1)

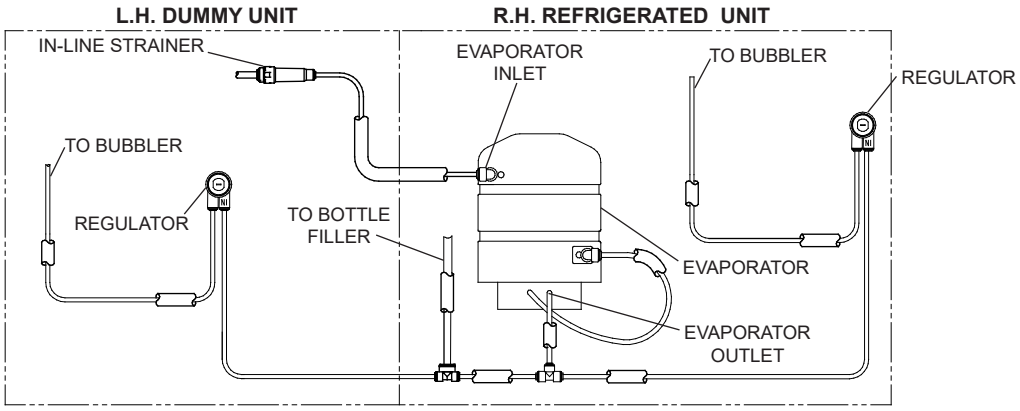

EMABF(WS) TWO LEVEL PLUMBING BOTTLE FILLER ON RH SIDE (SEE NOTE 2)

Fig. 4

RE-PLUMBING TWO LEVEL STATION WATER CIRCUITS (WITH FILTER)

CAUTION:

- This procedure MUST be performed on ALL TWO LEVEL ELKAY WATER COOLERS or the bottle filling unit WILL NOT perform properly!
- When disconnecting water lines use a container to catch any water running out of the lines.

1) Connect Water Supply:

- In the left hand unit,connect the Filter outlet using 1/4” poly tubing to the Evaporator 1/4” copper inlet using the supplied 1/4” quick connect fitting.

2) Add water supply to Bottle Filler to be located on LH unit:

- In the left hand unit, cut the Evaporator outlet 1/4” poly tubing approx. 5” from the access opening between the units, insert the 1/4” Tee fitting between the two pieces and connect 3/8” water line to tee.

3) Add water supply to Bottle Filler to be located on RH unit:

- In the right hand unit, cut the Evaporator outlet 1/4” poly tubing approx. 2” from the access opening between the units, insert the 1/4” Tee fitting between the two pieces and connect 3/8” water line to tee.

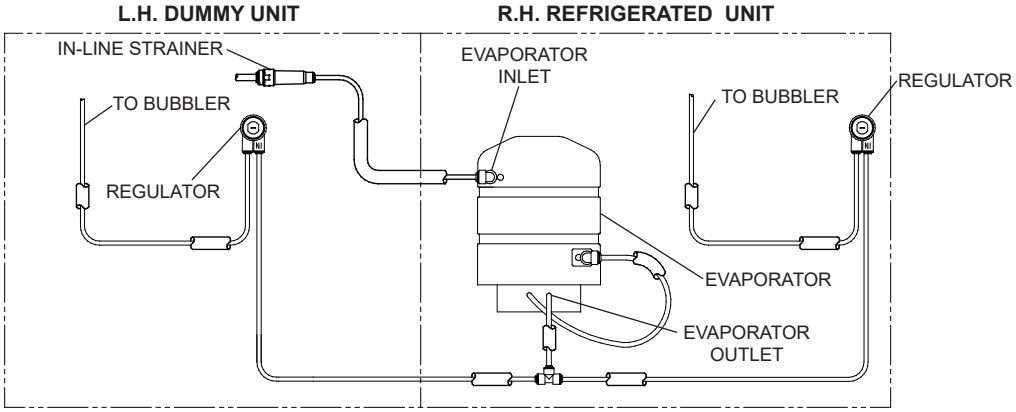

STANDARD EMABF TWO LEVEL PLUMBING WITHOUT BOTTLE FILLER

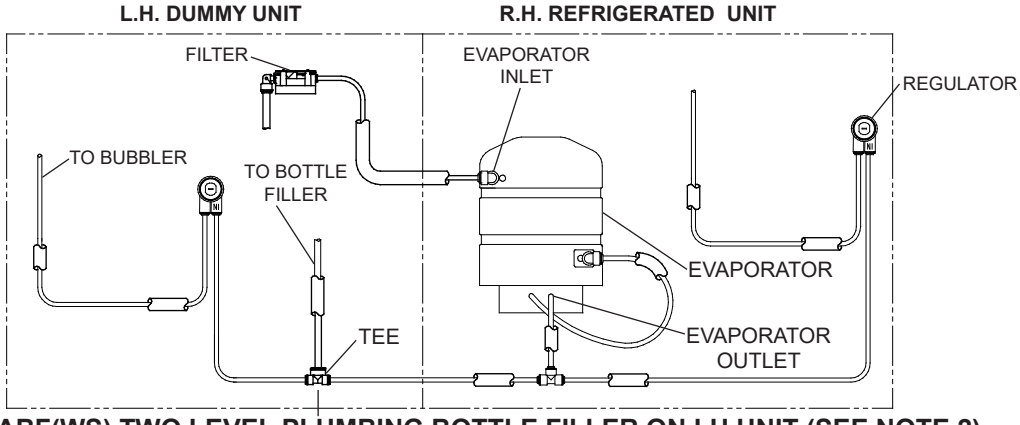

LMABF(WS) TWO LEVEL PLUMBING BOTTLE FILLER ON LH UNIT (SEE NOTE 2)

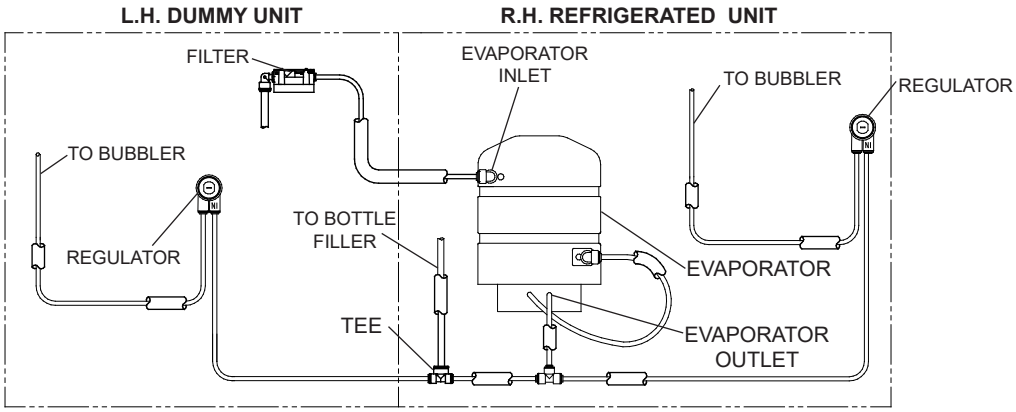

LMABF(WS) TWO LEVEL PLUMBING BOTTLE FILLER ON RH UNIT (SEE NOTE 3)

Fig. 5

BOTTLE FILLER INSTALLATION

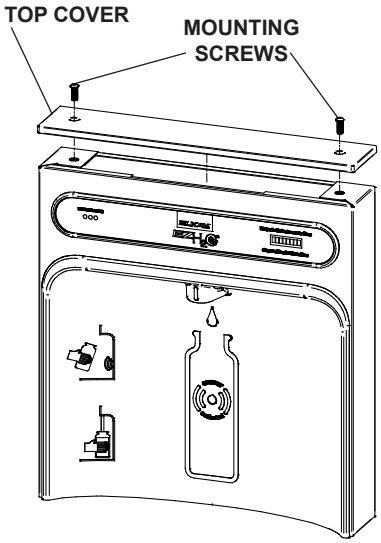

Fig. 6

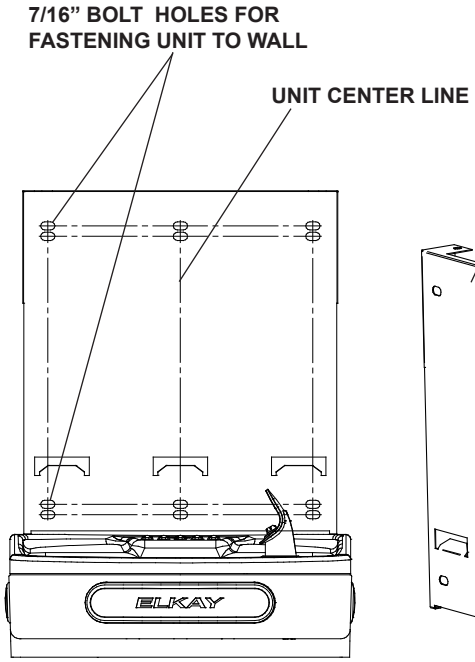

Fig. 7

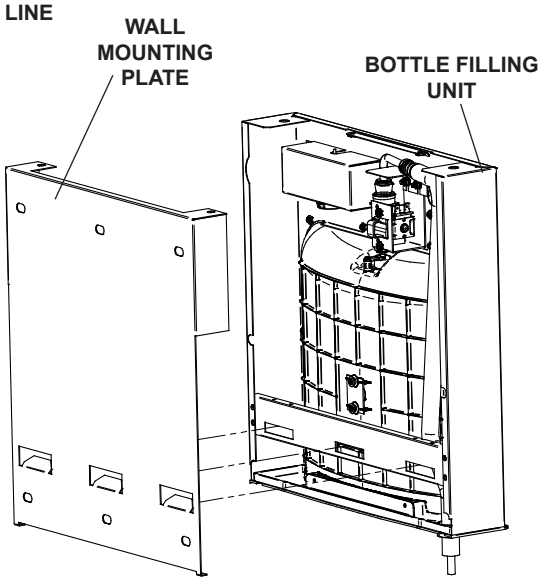

Fig. 8

BOTTLE FILLER INSTALLATION

1) Remove two (2) mounting screws with 5/32" Allen wrench holding top cover to Bottle Filler (See Fig. 6 - above). Remove top cover. Note do not discard mounting screws, they will be needed to reinstall top cover.
2) Remove wall mounting plate from Bottle Filler. Place wall plate against wall on top of basin. Center the wall plate side to side with the basin. Mark the six (6) mounting holes with a pencil (See Fig. 7 - above).
3) Remove wall mounting plate from wall. NOTE: Mounting plate MUST be supported securely. Add fixture support carrier if wall will not provide adequate support.
4) Install wall mounting plate to wall using six (6) 7/16" obround mounting holes (mounting bolts not included) (See Fig. 7 - above). Use appropriate fasteners for your wall type.
5) Feed power cord & 3/8" water line through hole in tower/basin gasket (See Fig 9, Page 11).
6) Install gasket on the bottom of bottle filler tower by pushing detents into place (See Fig 10, Page 11).
7) Lay Bottle Filler on water cooler basin and cut insulation from tube even with bottom of gasket, remove this insulation from the 3/8" tube, but do not discard. Feed the power cord and waterline through the hole on top of water cooler. NOTE: To prevent scratching the basin place a towel or soft cloth over the entire basin when working above it.
8) With the power cord and waterline through hole on top of water cooler place Bottle Filler on the three (3) angled tabs protruding from the wall (See Fig. 8 - above) mounting plate, installed on wall. Make sure round boss in gasket fits in hole of basin.
9) Once Bottle Filler is installed on wall plate tabs, water line and power cord are installed properly, push top of Bottle Filler toward wall and line up top cover two (2) holes.
10) Reinstall Top Cover on Bottle Filler (See Fig. 6 - above) with two mounting screws from step 1 above. Caution, do not over tighten screws.
11) Install remaining tube insulation to the water line from bottle filler, connect Bottle Filler waterline inside of the water cooler by connecting the 3/8" water line to the tee.
12) Install filter cartridge, remove filter from carton, remove protective cap, attach filter to filter head by firmly inserting into head and rotating filter clockwise. NOTE: If existing plumbing rough-in locations (Drain, Water In, and Electric Supply) do not allow the filter to be mounted inside the cooler cabinet. The filter can be installed horizontally below the unit. A retrofit kit is available to mount the filter beneath the cooler.
13) Turn water supply on and inspect for leaks. Fix all leaks before continuing.
14) Once unit has been inspected for leaks and any leaks found corrected, plug Bottle Filler and Cooler Unit into wall. Be sure to reinstall fuse to the circuit or switch the circuit breaker back to the "ON" position.
15) Once power is applied to Bottle Filler, the GREEN LED light should illuminate showing good filter status along with the LCD Bottle Counter.
16) Verify proper dispensing by placing cup, hand, or any opaque object in front of sensor area and verify water dispenses. Note: the first initial dispenses might have air in line which may cause a sputter. This will be eliminated once all air is purged from the line.
17) Once unit tests out, install Lower Panel back on water cooler. Unit is ready for use.

BOTTLE FILLER GASKET

Fig. 9

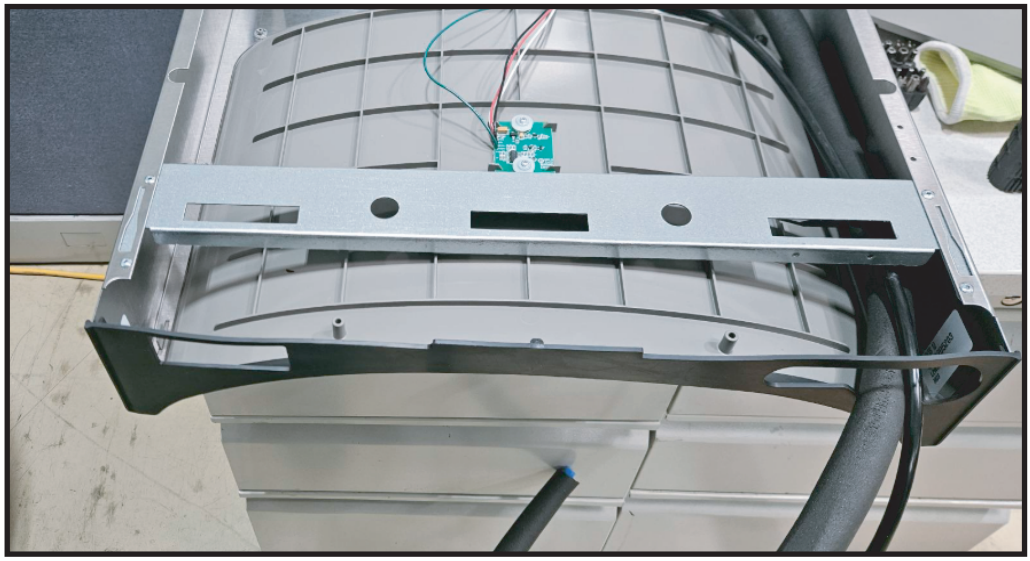

Fig. 10

BF11 - BF12 PROGRAM
SETTING THE CONTROL BOARD

VERIFY CONTROL BOARD SOFTWARE

1) To verify the software program of the control board the unit will need to be shut down and restarted. The chiller (if present) does not need to be shut down and restarted.
2) The units lower panel must be open to access the power cord and wall outlet.
3) Shut down the unit by unplugging the power cord from the wall outlet.
4) Restart the unit by plugging the power cord back into the wall outlet.
5) Upon start up, the bottle count display will show the software designation of BF11 or BF12.

ACCESSING THE PROGRAMMING BUTTON

1) To access the program button, remove the top cover of the bottle-filler. Remove the two (2) screws holding top cover to bottle-filler with a 5/32" allen wrench. Remove top cover. Do not discard mounting screws, they will be needed to reinstall the top cover after programming operations are completed. The programming button is located at the top right side of the unit on the control board.
NOTE: When applicable, there is also an alternate reset button located on the lower part of the water cooler. After removing the bottom cover, the reset button will be located on the left side of the cooler, mounted on the side panel support.

RESET THE FILTER MONITOR

1) Instructions apply to filtered units only.
2) Depress the program button for approximately 2 seconds until the display changes then release. The display will change and scroll through two messages:
"RST FLTR" – Reset Filter Monitor
"SETTINGS" – System Settings Sub Menu
If the program button is not pushed again the display will scroll through the two messages above for three cycles and then default back to bottle count and be back in run mode.
3) When the display changes to "RST FLTR", depress the button again. The display will change to show "FLTR =". Depress the button again and the display will show "FLTR =0"
4) The Green LED should be illuminated indicating that the visual filter monitor has been reset.

SETTING RANGE OF THE IR SENSOR WHERE APPLICABLE

1) Depress the program button for approximately 2 seconds until the display changes then release. The display will change and scroll through two messages:
"RST FLTR" – Reset Filter Status LED
"SETTINGS" – System Settings Sub Menu
If the program button is not pushed again the display will scroll through the two messages above for three cycles and then default back to bottle count and be back in run mode.
2) When the display changes to "SETTINGS", depress the button again. The display will change to show
"RNG SET" - Range set for IR sensor.
"UNIT TYP" - Type of unit (REFRIG or NON-RFRG)
"FLT SIZE" - Select filter capacity
"RST BCNT" - Reset bottle count
3) When display shows "RNG SET" push program button once the display will show current value (can be 1 – 10) e.g. "RNG = 3".
4) Once display shows current value push the program button to scroll through value of 1 – 10. Select the desired range setting, "1" being closest to sensor and "10" being farthest away.
5) Once range is selected allow approximately 4 seconds to pass and then the display will go back to bottle counter and be in run mode.
6) Test bottle filler by placing bottle or hand in front of sensor to make sure water is dispensed.

SETTING UNIT TYPE

1) Depress the program button for approximately 2 seconds until the display changes then release. The display will change and scroll through two messages:
"RST FLTR" – Reset Filter Status LED
"SETTINGS" – System Settings Sub Menu
If the program button is not pushed again the display will scroll through the two messages above for three cycles and then default back to bottle count and be back in run mode.

Continued from below:

2) When the display changes to "SETTINGS", depress the button again. The display will change to show
"RNG SET" - Range set for IR sensor.
"UNIT TYP" - Type of unit (REFRIG or NON-RFRG)
"FLT SIZE" - Select filter capacity
"RST BCNT" - Reset bottle count
3) When display shows "UNIT TYPE" push program button once the display will show current value. Can be REFRIG or NON-RFRG
4) Push button once to change value. Once value is selected the display will show the new value. (Can be REFRIG or NON-RFRG)
"REFRIG" - stands for refrigerated product. In this setting the flow rate is estimated at 1.0 gallon per minute.
"NON-RFRG" - stands for nonrefrigerated product. In this setting the flow rate is estimated at 1.5 gallons per minute. Both "REFRIG" and "NON-RFRG" simulate 1 bottle equal to 20 oz.
5) Allow approximately 4 seconds to pass and the display will return to bottle counter and be in run mode.

RESETTING BOTTLE COUNT

1) Depress the program button for approximately 2 seconds until the display changes then release. The display will change and scroll through two messages:
"RST FLTR" – Reset Filter Status LED
"SETTINGS" – System Settings Sub Menu
If the program button is not pushed again the display will scroll through the two messages above for three cycles and then default back to bottle count and be back in run mode.
2) When the display changes to "SETTINGS", depress the button again. The display will change to show:
"RNG SET"- Range set for IR sensor.
"UNIT TYP" - Type of unit (REFRIG or NON-RFRG)
"FLT SIZE" - Select filter capacity
"RST BCNT" - Reset bottle count
If the button is not pushed again the display will scroll through the four messages above for three cycles and return to run mode.
3) When display shows "RST BCNT" push program button once the display will show current value, e.g. "0033183".
4) Once display shows current value push the program button once more to reset back to 0. The display will show BTLCT = 0 for approximately 2 seconds and then return to run mode showing 00000000 bottles.
NOTE: Once the bottle count is reset to zero there is no way to return to the previous bottle count.
5) Testing the bottle counter:
REFRIG units: Place bottle or hand in front of sensor for approximately 9 seconds to see bottle counter count 00000001,
(This is based on filling a 20 oz. bottle).
NON-RFRG units: Place bottle or hand in front of sensor for approximately 6 seconds to see bottle counter count 00000001,
(This is based on filling a 20 oz bottle).

SETTING FILTER CAPACITY

1) Depress the program button for approximately 2 seconds until the display changes then release. The display will change and scroll through two messages:
"RST FLTR" – Reset Filter Status LED
"SETTINGS" – System Settings Sub Menu
If the program button is not pushed again the display will scroll through the two messages above for three cycles and then default back to bottle count and be back in run mode.
2) When the display changes to "SETTINGS", depress the button again. The display will change to show:
"RNG SET"- Range set for IR sensor.
"UNIT TYP" - Type of unit (REFRIG or NON-RFRG)
"FLT SIZE" - Select filter capacity
"RST BCNT" - Reset bottle count
If the button is not pushed again the display will scroll through the four messages above for three cycles and return to run mode.
3) When display shows "FLT SIZE" push program button once. The display will show current value. Can be 3000GAL or 6000GAL.
4) Push program button again to display the desired "FLT SIZE".
5) Allow approximately 4 seconds to pass and the display will return to bottle counter and be in run mode.

BASIN ASSEMBLY PREPARATION

1) Connect Water Line
   - Connect water line from Regulator to Bubbler.

Connect Water Line

2) Install New Basin Assembly
   - Reposition Basin Assembly (Basin with Drain and Bubbler hardware) back onto the cooler.
   - Reattach drain line to P-trap and tighten.

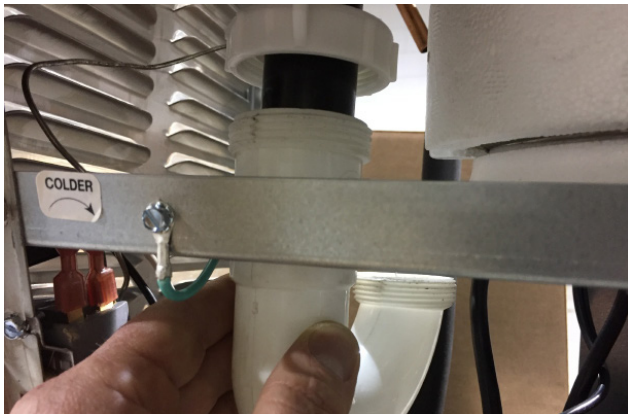

Reattach drain line to P-trap

3) Fasten Basin Assembly in place.
   - Insert and retighten the 8 screws, four per side.

Fasten Basin Assembly in place.

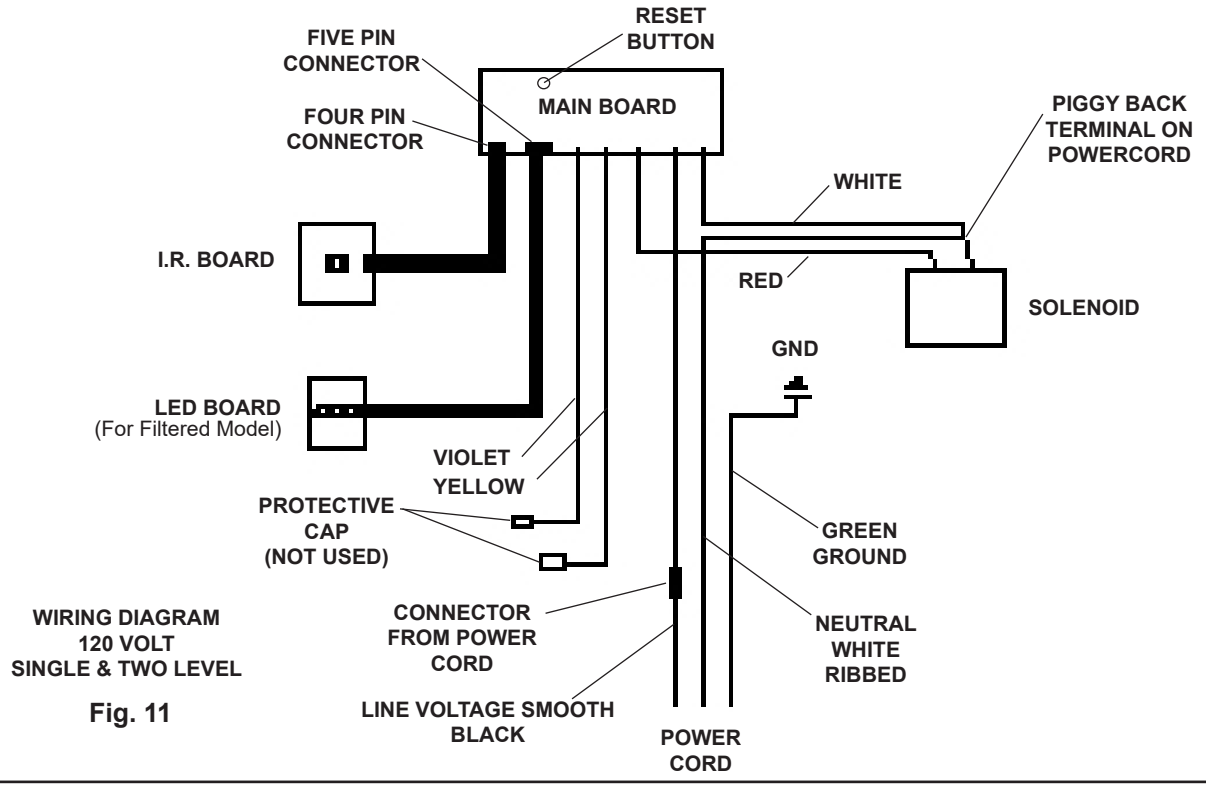

WIRING DIAGRAM 120 VOLT SINGLE & TWO LEVEL

Fig. 11

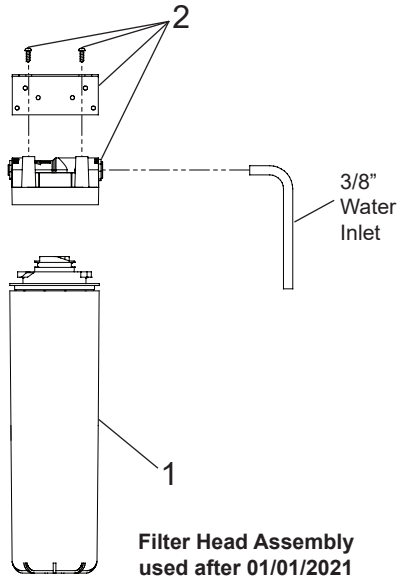

Filter Head Assembly used after 01/01/2021

Fig.12

WATERSENTRY® FILTER PARTS LIST		
ITEM NO.	PART NO.	DESCRIPTION
1	51300C	Filter Assy - 3000 Gal.
2	0000000746	Assy-Filter & Bracket includes Fltr Head/Mtg Bkt/ John Guest Ftgs/Screws

Scan for troubleshooting information and to subscribe to automatic filter replacements at a discount.

REPLACEMENT PART KITS

PART NO.	DESCRIPTION
98543C	Kit - Electrical Package 115V
98544C	Kit - IR Sensor 115V & 220V
1000004573	Kit - Solenoid Valve Replacement 115V
98546C	Kit - Aerator Replacement
98547C	Kit - Top Cover Replacement
98549C	Kit - Hardware & Waterway Parts
98631C	Kit - Electrical Package 220V
1000004574	Kit - Solenoid Valve Replacement 220V
1000000887	Kit - Filter Mounting Cover (L)
98669C	Kit - Filter Mounting Cover (SS)
98670C	Kit - Retro Filter Mounting
0000001338	Kit - Basin
1000001812	Kit - Bottle Filler Drain
1000001813	Kit - Tower Gasket/Bracket/Screws
1000001889	Kit - Drain Replacement

1000004724

Patent zurnelkay.com/patents

PRINTED IN U.S.A.

REPAIR SERVICE INFORMATION TOLL FREE NUMBER 1.800.260.6640

FOR PARTS, CONTACT YOUR LOCAL DISTRIBUTOR OR CALL 1.800.834.4816

ELKAY MANUFACTURING Co. • 1333 BUTTERFIELD ROAD SUITE 200 • DOWNERS GROVE • IL 60515 • USA 630.574.8484 • www.elkay.com