ELKAY®

INSTALLATION & USE MANUAL

EZWSRK - ezH2O® RETRO-FIT BOTTLE FILLING UNIT
LZWSRK - ezH2O® RETRO-FIT BOTTLE FILLING UNIT

IMPORTANT

THIS IS AN INDOOR APPLICATION ONLY.
ALL SERVICE TO BE PERFORMED BY AN AUTHORIZED SERVICE PERSON.

TOOLS REQUIRED

BUT NOT PROVIDED:

SAFETY GLASSES
GLOVES
3/4" WRENCH OR CRESCENT WRENCH
5/16" NUT DRIVER
UTILITY KNIFE
TAPE MEASURE
PENCIL
CENTER PUNCH
1/2" SOCKET & RATCHET WRENCH
5/32" ALLEN WRENCH
7/64" ALLEN WRENCH

IMPORTANT! INSTALLER PLEASE NOTE.

THE GROUNDING OF ELECTRICAL EQUIPMENT SUCH AS TELEPHONE, COMPUTERS, ETC. TO WATER LINES IS A COMMON PROCEDURE. THIS GROUNDING MAY BE IN THE BUILDING OR MAY OCCUR AWAY FROM THE BUILDING. THIS GROUNDING CAN CAUSE ELECTRICAL FEEDBACK INTO A FOUNTAIN, CREATING AN ELECTROLYSIS WHICH CAUSES A METALLIC TASTE OR AN INCREASE IN THE METAL CONTENT OF THE WATER. THIS CONDITION IS AVOIDABLE BY USING THE PROPER MATERIALS AS INDICATED. ANY DRAIN FITTINGS PROVIDED BY THE INSTALLER SHOULD BE MADE OF PLASTIC TO ELECTRICALLY ISOLATE THE FOUNTAIN FROM THE BUILDING PLUMBING SYSTEM. WE SUGGEST THAT THE BOTTLE FILLING STATION AND WATER COOLER BE PROTECTED BY A GROUND FAULT CIRCUIT INTERRUPTER (GFCI).

INSTALLER

EZWSR / LZWSR Bottle Fillers are among the easiest to install on the market today. To insure you install these models easily and correctly, PLEASE READ THESE SIMPLE INSTRUCTIONS BEFORE STARTING THE INSTALLATION. CHECK YOUR INSTALLATION FOR COMPLIANCE WITH PLUMBING, ELECTRICAL, AND OTHER APPLICABLE CODES. After installation, leave these instructions with the Cooler for future reference.

Note: Danger! Electrical shock hazard. Disconnect power before servicing unit.

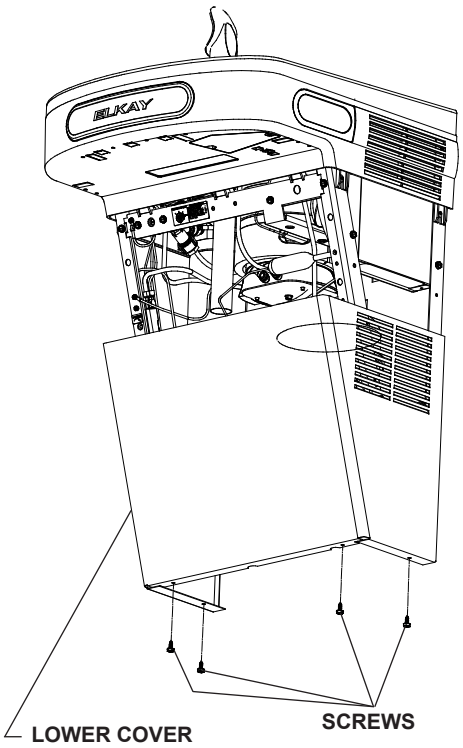

Fig. 1

WATER COOLER PREPARATION

1. Remove lower front panel of watercooler by removing the four (4) screws from the bottom of cooler. (See Fig. 1) NOTE: For Bi-Level Models the Bottle Filling Unit can be mounted to the higher or lower unit. Both lower front panels and basin assemblies will need to be removed.

1a. For units with model no's. ending with 1, 1A, 2 or 3 these units will need to be removed from the wall in order to remove the basin assembly(s).

2. **Power OFF circuit that the water cooler is connected to by switching the circuit breaker to the "OFF" position or by removing the fuse to the circuit. Remove the water cooler plug from the outlet and shut off water supply.**
3. Remove Basin Assembly by loosening four (4) screws two on each side of cooler as shown in Fig. 8. Disconnect water line "A" from bubbler at the evaporator tank (See Fig. 6). NOTE: When disconnecting water lines use a container to catch any water running out of the lines. Disconnect basin assembly from drain trap. Lift basin assembly straight up to remove, and disconnect two wires from push bar switches. **(Note: This will allow easier assembly of water filter to unit and pressurization of the unit.)**
4. For units referenced in step "1a". Remove Basin Assembly by loosening four (4) screws two on each side of cooler as shown in Fig. 8. Remove 2 screws from top back of unit to remove the "L" bracket. Remove 1 screw from left side of cross brace in front of unit that retains the drain support. Disconnect water line "A" from regulator at the evaporator tank (See Fig. 6B). NOTE: When disconnecting water lines use a container to catch any water running out of the lines. Disconnect basin assembly from drain trap. Lift basin assembly straight up to remove, and disconnect two wires from push bar switches. **(Note: This will allow easier assembly of water filter to unit and pressurization of the unit.)**

EWF3000 WATERSENTRY PLUS FILTER INSTALLATION

NOTICE: Do not use with water that is microbiologically unsafe or of unknown quality without adequate disinfection before or after the system.

1. These filter kits must be installed in compliance with all state and local laws and regulations governing the installation and use of this product. Maximum inlet water temperature 100°F (38°C).
2. See filter instructions for filter assembly. Insert 3/8" elbow fitting into the inlet side of filter head, insert 1/4" poly tube or 1/4" x 90° elbow into outlet side of filter head prior to mounting the filter head assembly into the cooler.
3. Mount filter head as shown in Fig. 9, using the filter mounting bracket and screws supplied. For Bi-Level units the filter must be mounted to the L.H. non-refrigerated unit at the same location as shown in Fig. 9.

PRESSURIZATION OF WATER SYSTEM

NOTE: This procedure MUST be performed on ALL SINGLE EZ WATER COOLERS or the bottle filling unit WILL NOT perform properly!

1. Remove water inlet (B) and outlet (C) from solenoid valve (See Fig. 6 or 6B). NOTE: When disconnecting water lines use a container to catch any water running out of the lines.
2. **CAUTION: If supply pressure will ever exceed 100 psi, install a pressure regulator to limit the inlet pressure to the filter to 100 psi or below. DO NOT ATTACH HOT WATER LINE TO FILTER.** To make connections on the filter head, loosen locknut. Push the tube end past both o-rings to a positive stop in the filter head recess - approx. 1", locknut may have to be backed out a little more. Screw the locknut hand tight to seal (See Fig. 10). Ends of tubing must be cut square and free of burrs and sharp ends that could cut or nick the o-rings.
3. Connect the outlet of the filter to the inlet of the evaporator using the 1/4" O.D. poly tubing and 1/4" union supplied (See Fig. 7 or 7B).
4. Cut a 12" long piece of poly tube (be sure to insulate poly tube with supplied insulation tubing) and insert one end into the outlet side of the evaporator "D" (See Fig. 7 or 7B), connect Tee to other end of tube.
5. Cut a 12" long piece of poly tube (be sure to insulate poly tube with supplied insulation tubing) and insert into the Tee and the other end into the inlet side of the solenoid valve "E" (See fig. 7 or 7B).

Bi-Level MODIFICATION OF WATER SYSTEM

NOTE: Bi-Level water systems are already plumbed for pressurization.

STANDARD Bi-Level MODELS

Follow instruction 2 thru 4 under "Pressurization of water system" to attach filter to water system. The non-refrigerated side must be removed from the wall in order to remove the basin assy. and install the filter head assy.

1. Remove the Bi-Level Cover Plate from the right hand side of the non-refrigerated unit in order to access the rear Basin Assy. screw.
2. Cut poly tube "H" between the existing tee and the solenoid valve of the L.H. unit (See Fig. 6A or 6C).
3. Insert supplied Tee in water line "H" where it was just cut (See Fig. 7A or 7C).

Bi-Level Versatile MODELS

Follow instruction 2 thru 4 under "Pressurization of water system" to attach filter to water system. The non refrigerated side must be removed from the wall in order to remove the basin assy. and install the filter head assy.

1. Remove the Bi-Level Cover Plate from the left hand side of the refrigerated unit in order to access the rear Basin Assy. screw (See Fig 8).
2. Cut poly tube "H" approximately 3" from the left side of the existing tee.
3. Insert supplied tee in water line "H" where it was just cut.

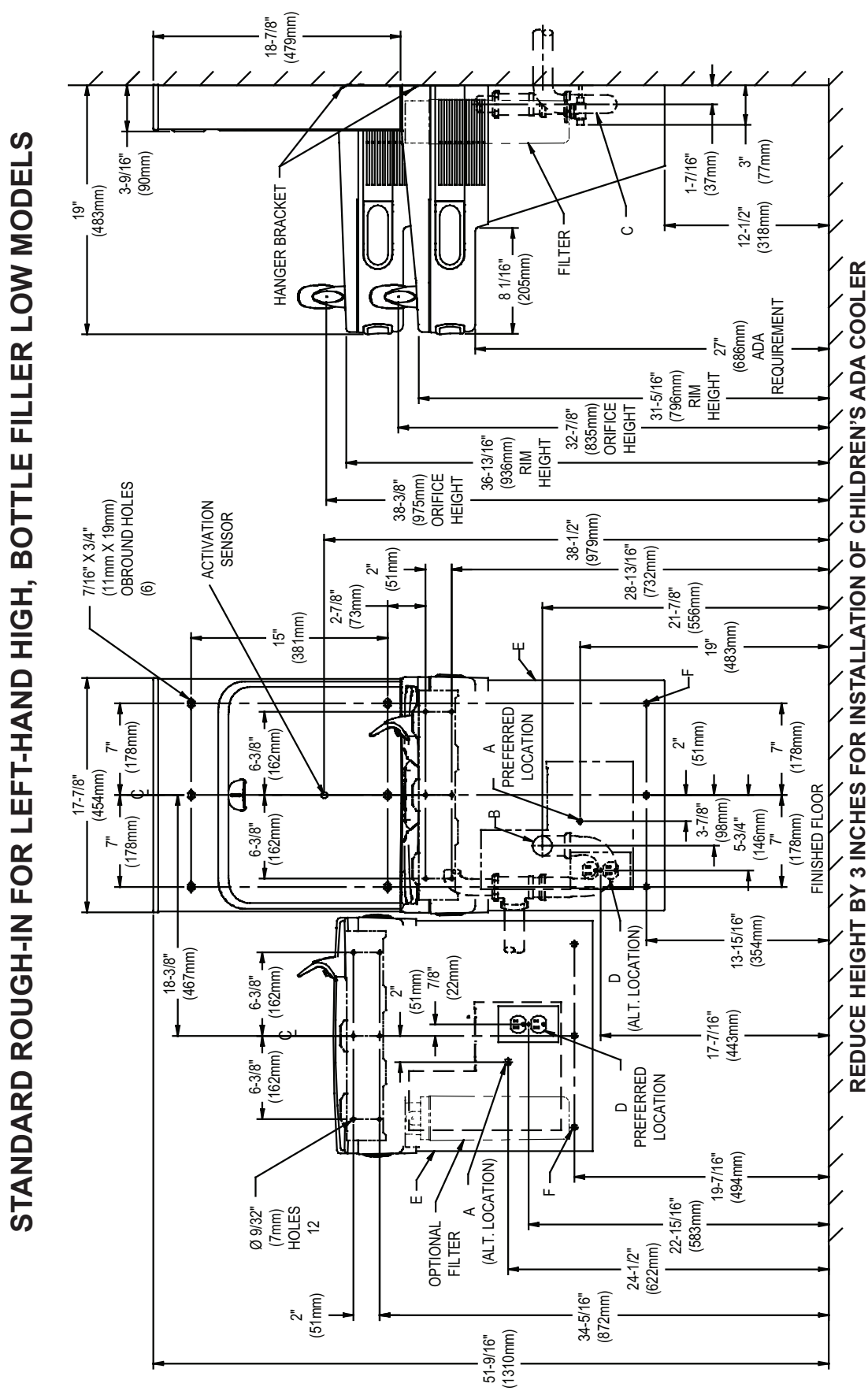

LEGEND/LEYENDA/LÉGENDE

A = RECOMMENDED WATER SUPPLY LOCATION 3/8 O.D. UNPLATED COPPER TUBE CONNECT STUB WITH SHUT OFF (BY OTHERS) 3 IN. (76mm) MAXIMUM OUT FROM WALL, MAXIMUM WATER SUPPLY PRESSURE: 105 PSI (0.73 MPa)
La UBICACION 3/8 O RECOMENDADA de ABASTECIMIENTO DE AGUA. D. EI TUBO del COBRE de UNPLATED CONECTA TALONARIO CON APAGO (POR OTROS) 3 en. (76 Mm) el MAXIMO FUERA DE PARED. PRESIÓN MÁXIMA DE SUMINISTRO DE AGUA: 105 PSI (0.73 MPa)
L'O.D de 3/8 d'EMPLACEMENT DE PROVISION D'EAU RECOMMANDE. LE TUBE DE CUIVRE DE UNPLATED CONNECTE STUB AVEC ETEINT (PAR LES AUTRES) 3 dans. (76 mm) le MAXIMUM HORS DU MUR, PRESSION MAXIMALE D'ALIMENTATION EN EAU: 105 PSI (0.73 MPa)

B = RECOMMENDED LOCATION FOR WASTE OUTLET 1-1/2" O.D. DRAIN STUB 2 IN. OUT FROM WALL
UBICACIÓN RECOMENDADA PARA EL DRENAJE DE SALIDA DE AGUA, DE 1-1/2" DE DIÁMETRO. EI TALONARIO 2 FUERA DE PARED
EMPLACEMENT RECOMMANDÉ POUR LE DRAIN DE D.E. 1-1/2" DE SORTIE D'EAU. STUB 2 HORS DU MUR

C = 1-1/2" TRAP NOT FURNISHED
PURGADOR DE 1-1/2" NO PROPORCIONADO
SIPHON 1-1/2" NON FOURNI

D = ELECTRICAL SUPPLY (3) WIRE RECESSED BOX**
CAJA RECESIVA DE ALAMBRES (3) DE SUMINISTRO ELÉCTRICO
BOÎTE ENCASTRÉE D'ALIMENTATION ÉLECTRIQUE (3) FILS

LEGEND/LEYENDA/LÉGENDE

D = ELECTRICAL SUPPLY (3) WIRE RECESSED BOX**
CAJA RECESIVA DE ALAMBRES (3) DE SUMINISTRO ELÉCTRICO
BOÎTE ENCASTRÉE D'ALIMENTATION ÉLECTRIQUE (3) FILS

E = INSURE PROPER VENTILATION BY MAINTAINING 6" (152 mm) (MIN.) CLEARANCE FROM CABINET LOUVERS TO WALL.
ASEGURE UNA VENTILACIÓN ADECUADA MANTENIENDO UN ESPACIO E 6" (152 mm) (MIN.) DE HOLGURA ENTRE LA REJILLA DE VENTILACIÓN DEL MUEBLE Y LA PARED.
ASSUREZ-VOUS UNE BONNE VENTILATION EN GARDANT 6" (152 mm) (MIN.) ENTRE LES ÉVENTS DE L'ENCEINTE ET LE MUR.

F = 7/16 BOLT HOLES FOR FASTENING UNIT TO WALL
AGUJEROS DE LAS TUERCAS DE 7/16 PARA SUJETAR LA UNIDAD A LA PARED
TROUS D'ÉCROUS 7/16 POUR FIXER L'APPAREIL AU MUR

****NEW INSTALLATIONS MUST USE GROUND FAULT CIRCUIT INTERRUPTER (GFCI)**
****Las nuevas instalaciones deben utilizar el interruptor de circuito de tierra de la avería (GFCI)**
****Les nouvelles installations doivent employer l'interrupteur de circuit moulu de défaut (GFCI)**

Fig. 2

ALTERNATE ROUGH-IN FOR RIGHT-HAND HIGH, BOTTLE FILLER LOW MODELS

REQUIRES BASIN ASSY CHANGE. SEE PAGE 11 FOR INSTRUCTIONS

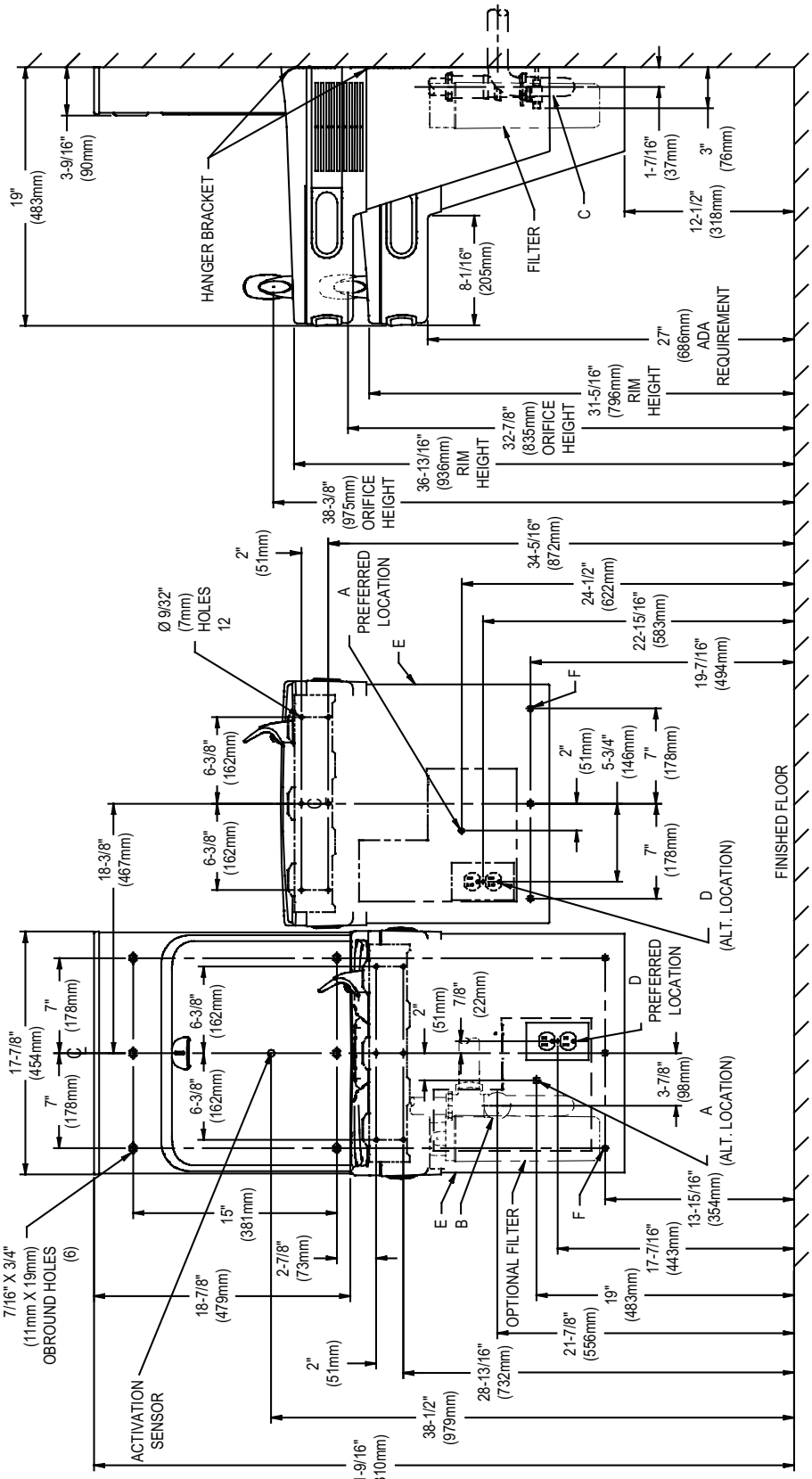

REDUCE HEIGHT BY 3 INCHES FOR INSTALLATION OF CHILDREN'S ADA COOLER

LEGEND/LEYENDA/LÉGENDE
A = RECOMMENDED WATER SUPPLY LOCATION 3/8 O.D. UNPLATED COPPER TUBE CONNECT STUB WITH SHUT OFF (BY OTHERS) 3 IN. (76mm) MAXIMUM OUT FROM WALL, MAXIMUM WATER SUPPLY PRESSURE: 105 PSI (0.73 MPa)
La UBICACION 3/8 O RECOMENDADA de ABASTECIMIENTO DE AGUA. D. EI TUBO del COBRE de UNPLATED CONECTA TALONARIO CON APAGO (POR OTROS) 3 en. (76 Mm) el MAXIMO FUERA DE PARED. PRESIÓN MÁXIMA DE SUMINISTRO DE AGUA: 105 PSI (0.73 MPa)
L'O.D de 3/8 d'EMPLACEMENT DE PROVISION D'EAU RECOMMANDE. LE TUBE DE CUIVRE DE UNPLATED CONNECTE STUB AVEC ETEINT (PAR LES AUTRES) 3 dans. (76 mm) le MAXIMUM HORS DU MUR. PRESSION MAXIMALE D'ALIMENTATION EN EAU: 105 PSI (0.73 MPa)
B = RECOMMENDED LOCATION FOR WASTE OUTLET 1-1/2" O.D. DRAIN STUB 2 IN. OUT FROM WALL
UBICACIÓN RECOMENDADA PARA EL DRENAJE DE SALIDA DE AGUA. DE 1-1/2" DE DIÁMETRO. EI TALONARIO 2 FUERA DE PARED
EMPLACEMENT RECOMMANDÉ POUR LE DRAIN DE D.E. 1-1/2" DE SORTIE D'EAU. STUB 2 HORS DU MUR
C = 1-1/2" TRAP NOT FURNISHED
PURGADOR DE 1-1/2" NO PROPORCIONADO
SIPHON 1-1/2" NON FOURNI
D = ELECTRICAL SUPPLY (3) WIRE RECESSED BOX**
CAJA RECESIVA DE ALAMBRES (3) DE SUMINISTRO ELÉCTRICO
BOÎTE ENCASTRÉE D'ALIMENTATION ÉLECTRIQUE (3) FILS

LEGEND/LEYENDA/LÉGENDE
D = ELECTRICAL SUPPLY (3) WIRE RECESSED BOX**
CAJA RECESIVA DE ALAMBRES (3) DE SUMINISTRO ELÉCTRICO
BOÎTE ENCASTRÉE D'ALIMENTATION ÉLECTRIQUE (3) FILS
E = INSURE PROPER VENTILATION BY MAINTAINING 6" (152 mm) (MIN.) CLEARANCE FROM CABINET LOUVERS TO WALL.
ASEGURE UNA VENTILACIÓN ADECUADA MANTENIENDO UN ESPACIO E 6" (152 mm) (MÍN.) DE HOLGURA ENTRE LA REJILLA DE VENTILACIÓN DEL MUEBLE Y LA PARED.
ASSUREZ-VOUS UNE BONNE VENTILATION EN GARDANT 6" (152 mm) (MIN.) ENTRE LES ÉVENTS DE L'ENCEINTE ET LE MUR.
F = 7/16 BOLT HOLES FOR FASTENING UNIT TO WALL
AGUJEROS DE LAS TUERCAS DE 7/16 PARA SUJETAR LA UNIDAD A LA PARED
TROUS D'ÉCROUS 7/16 POUR FIXER L'APPAREIL AU MUR
****NEW INSTALLATIONS MUST USE GROUND FAULT CIRCUIT INTERRUPTER (GFCI)**
****Las nuevas instalaciones deben utilizar el interruptor de circuito de tierra de la avería (GFCI)**
****Les nouvelles installations doivent employer l'interrupteur de circuit moulu de défaut (GFCI)**

Fig. 3

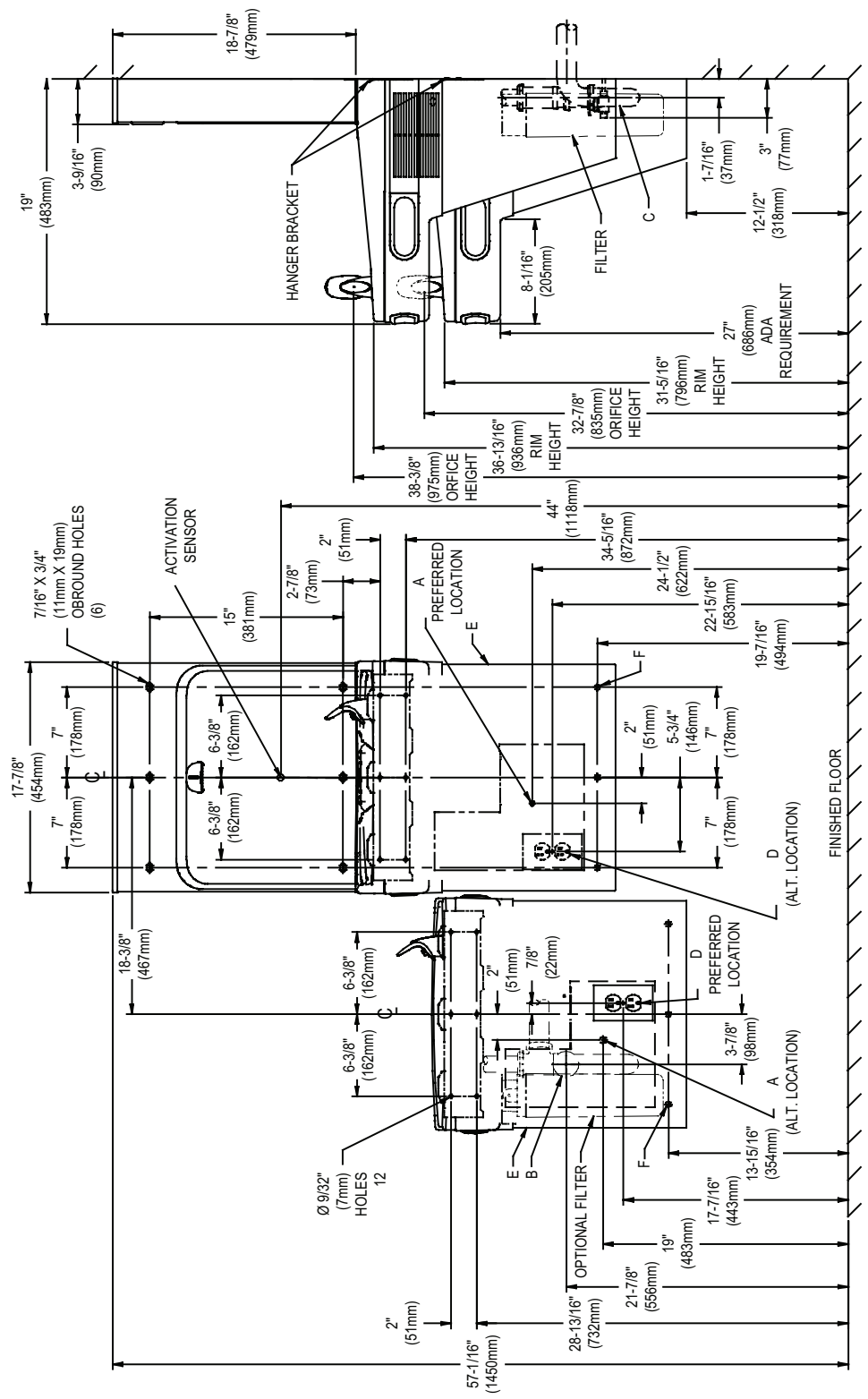
ALTERNATE ROUGH-IN FOR RIGHT-HAND HIGH, BOTTLE FILLER HIGH MODELS
REDUCE HEIGHT BY 3 INCHES FOR INSTALLATION OF CHILDREN'S ADA COOLER
18-7/8" (479mm)
19" (483mm)
3-9/16" (90mm)
HANGER BRACKET
FILTER
C
1-7/16" (37mm)
3" (77mm)
12-1/2" (318mm)
8-1/16" (205mm)
27" (686mm) ADA REQUIREMENT
31-5/16" (796mm) RIM HEIGHT
32-7/8" (835mm) ORIFICE HEIGHT
36-13/16" (936mm) RIM HEIGHT
38-3/8" (975mm) ORIFICE HEIGHT
44" (1118mm)
34-5/16" (872mm)
24-1/2" (622mm)
22-15/16" (583mm)
19-7/16" (494mm)
7/16" X 3/4" (11mm X 19mm) OBROUND HOLES (6)
ACTIVATION SENSOR
15" (381mm)
2-7/8" (73mm)
2" (51mm)
A PREFERRED LOCATION
E
F
17-7/8" (454mm)
7" (178mm)
6-3/8" (162mm)
5-3/4" (146mm)
D (ALT. LOCATION)
FINISHED FLOOR
18-3/8" (467mm)
7/8" (22mm)
D PREFERRED LOCATION
3-7/8" (98mm)
A (ALT. LOCATION)
Ø 9/32" (7mm) HOLES 12
B
OPTIONAL FILTER
13-15/16" (354mm)
17-7/16" (443mm)
21-7/8" (556mm)
28-13/16" (732mm)
57-1/16" (1450mm)
LEGEND/LEYENDA/LÉGENDE
A = RECOMMENDED WATER SUPPLY LOCATION 3/8 O.D. UNPLATED COPPER TUBE CONNECT STUB WITH SHUT OFF (BY OTHERS) 3 IN. (76mm) MAXIMUM OUT FROM WALL, MAXIMUM WATER SUPPLY PRESSURE: 105 PSI (0.73 MPa)
La UBICACION 3/8 O RECOMENDADA de ABASTECIMIENTO DE AGUA. D. El TUBO del COBRE de UNPLATED CONECTA TALONARIO CON APAGO (POR OTROS) 3 en. (76 Mm) el MAXIMO FUERA DE PARED. PRESIÓN MÁXIMA DE SUMINISTRO DE AGUA: 105 PSI (0.73 MPa)
L'O.D de 3/8 d'EMPLACEMENT DE PROVISION D'EAU RECOMMANDE. LE TUBE DE CUIVRE DE UNPLATED CONNECTE STUB AVEC ETEINT (PAR LES AUTRES) 3 dans. (76 mm) le MAXIMUM HORS DU MUR. PRESSION MAXIMALE D'ALIMENTATION EN EAU: 105 PSI (0.73 MPa)
B = RECOMMENDED LOCATION FOR WASTE OUTLET 1-1/2" O.D. DRAIN STUB 2 IN. OUT FROM WALL
UBICACIÓN RECOMENDADA PARA EL DRENAJE DE SALIDA DE AGUA, DE 1-1/2" DE DIÁMETRO. El TALONARIO 2 FUERA DE PARED
EMPLACEMENT RECOMMANDÉ POUR LE DRAIN DE D.E. 1-1/2" DE SORTIE D'EAU. STUB 2 HORS DU MUR
C = 1-1/2" TRAP NOT FURNISHED
PURGADOR DE 1-1/2" NO PROPORCIONADO
SIPHON 1-1/2" NON FOURNI
D = ELECTRICAL SUPPLY (3) WIRE RECESSED BOX**
CAJA RECESIVA DE ALAMBRES (3) DE SUMINISTRO ELÉCTRICO
BOÎTE ENCASTRÉE D'ALIMENTATION ÉLECTRIQUE (3) FILS
LEGEND/LEYENDA/LÉGENDE
D = ELECTRICAL SUPPLY (3) WIRE RECESSED BOX**
CAJA RECESIVA DE ALAMBRES (3) DE SUMINISTRO ELÉCTRICO
BOÎTE ENCASTRÉE D'ALIMENTATION ÉLECTRIQUE (3) FILS
E = INSURE PROPER VENTILATION BY MAINTAINING 6" (152 mm) (MIN.) CLEARANCE FROM CABINET LOUVERS TO WALL.
ASEGURE UNA VENTILACIÓN ADECUADA MANTENIENDO UN ESPACIO E 6" (152 mm) (MIN.) DE HOLGURA ENTRE LA REJILLA DE VENTILACIÓN DEL MUEBLE Y LA PARED
ASSUREZ-VOUS UNE BONNE VENTILATION EN GARDANT 6" (152 mm) (MIN.) ENTRE LES ÉVENTS DE L'ENCEINTE ET LE MUR.
F = 7/16 BOLT HOLES FOR FASTENING UNIT TO WALL
AGUJEROS DE LAS TUERCAS DE 7/16 PARA SUJETAR LA UNIDAD A LA PARED
TROUS D'ÉCROUS 7/16 POUR FIXER L'APPAREIL AU MUR
**NEW INSTALLATIONS MUST USE GROUND FAULT CIRCUIT INTERRUPTER (GFCI)
**Las nuevas instalaciones deben utilizar el interruptor de circuito de tierra de la avería (GFCI)
**Les nouvelles installations doivent employer l'interrupteur de circuit moulu de défaut (GFCI)

Fig. 4

ALTERNATE ROUGH-IN FOR LEFT-HAND HIGH, BOTTLE FILLER HIGH MODELS REQUIRES BASIN ASSY CHANGE. SEE PAGE 11 FOR INSTRUCTIONS

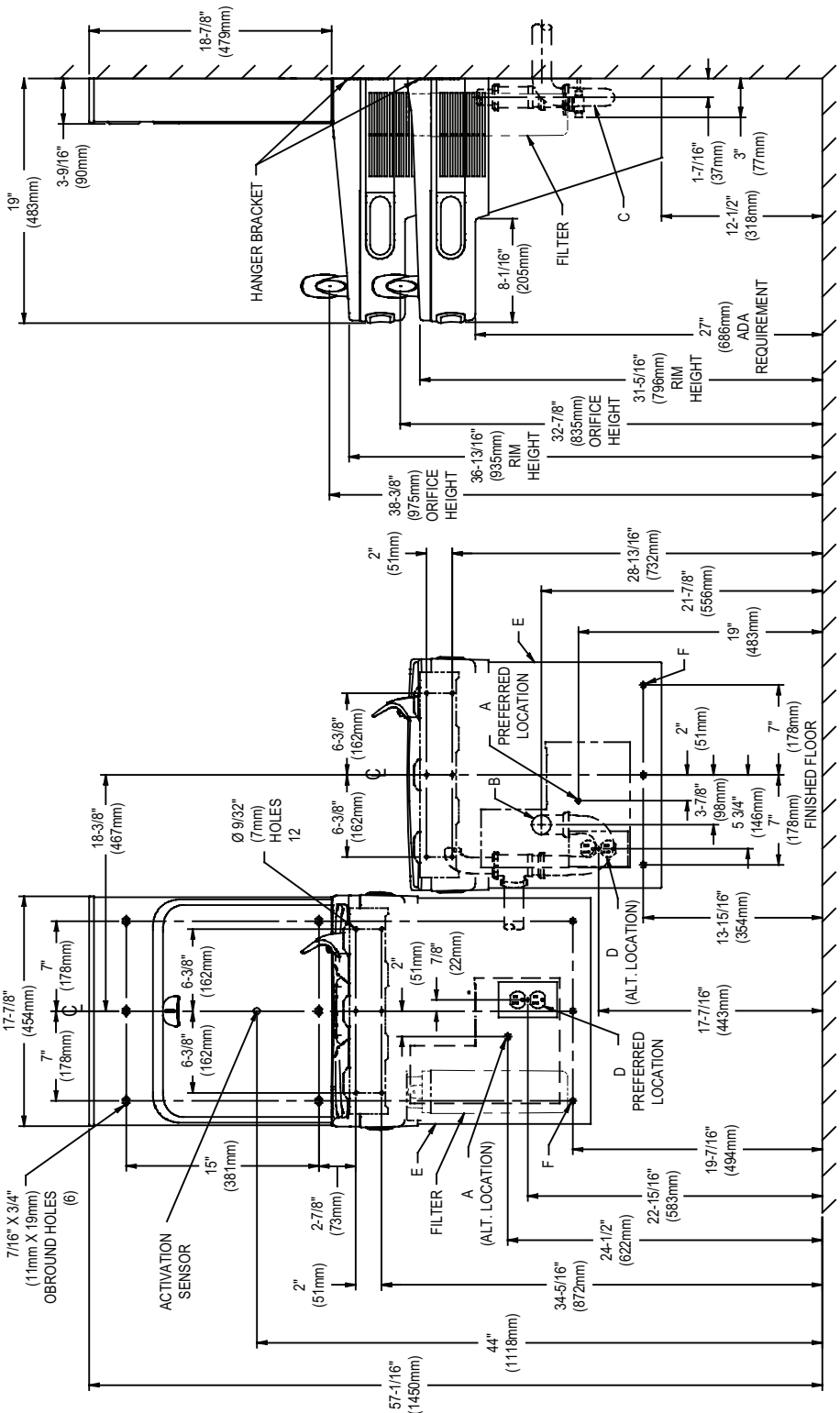

REDUCE HEIGHT BY 3 INCHES FOR INSTALLATION OF CHILDREN'S ADA COOLER

LEGEND/LEYENDA/LÉGENDE

A = RECOMMENDED WATER SUPPLY LOCATION 3/8 O.D. UNPLATED COPPER TUBE CONNECT STUB WITH SHUT OFF (BY OTHERS) 3 IN. (76mm) MAXIMUM OUT FROM WALL, MAXIMUM WATER SUPPLY PRESSURE: 105 PSI (0.73 MPa)
La UBICACION 3/8 O RECOMENDADA de ABASTECIMIENTO DE AGUA D. EI TUBO del COBRE de UNPLATED CONECTA TALONARIO CON APAGO (POR OTROS) 3 en. (76 Mm) el MAXIMO FUERA DE PARED. PRESIÓN MÁXIMA DE SUMINISTRO DE AGUA: 105 PSI (0.73 MPa)
L'O.D de 3/8 d'EMPLACEMENT DE PROVISION D'EAU RECOMMANDE. LE TUBE DE CUIVRE DE UNPLATED CONNECTE STUB AVEC ETEINT (PAR LES AUTRES) 3 dans. (76 mm) le MAXIMUM HORS DU MUR. PRESSION MAXIMALE D'ALIMENTATION EN EAU: 105 PSI (0.73 MPa)

B = RECOMMENDED LOCATION FOR WASTE OUTLET 1-1/2" O.D. DRAIN STUB 2 IN. OUT FROM WALL
UBICACIÓN RECOMENDADA PARA EL DRENAJE DE SALIDA DE AGUA, DE 1-1/2" DE DIÁMETRO, EI TALONARIO 2 FUERA DE PARED
EMPLACEMENT RECOMMANDÉ POUR LE DRAIN DE D.E. 1-1/2" DE SORTIE D'EAU. STUB 2 HORS DU MUR

C = 1-1/2" TRAP NOT FURNISHED
PURGADOR DE 1-1/2" NO PROPORCIONADO
SIPHON 1-1/2" NON FOURNI

D = ELECTRICAL SUPPLY (3) WIRE RECESSED BOX**
CAJA RECESIVA DE ALAMBRES (3) DE SUMINISTRO ELÉCTRICO
BOÎTE ENCASTRÉE D'ALIMENTATION ÉLECTRIQUE (3) FILS

LEGEND/LEYENDA/LÉGENDE

D = ELECTRICAL SUPPLY (3) WIRE RECESSED BOX**
CAJA RECESIVA DE ALAMBRES (3) DE SUMINISTRO ELÉCTRICO
BOÎTE ENCASTRÉE D'ALIMENTATION ÉLECTRIQUE (3) FILS

E = INSURE PROPER VENTILATION BY MAINTAINING 6" (152 mm) (MIN.) CLEARANCE FROM CABINET LOUVERS TO WALL.
ASEGURE UNA VENTILACIÓN ADECUADA MANTENIENDO UN ESPACIO E 6" (152 mm) (MÍN.) DE HOLGURA ENTRE LA REJILLA DE VENTILACIÓN DEL MUEBLE Y LA PARED.
ASSUREZ-VOUS UNE BONNE VENTILATION EN GARDANT 6" (152 mm) (MIN.) ENTRE LES ÉVENTS DE L'ENCEINTE ET LE MUR.

F = 7/16 BOLT HOLES FOR FASTENING UNIT TO WALL
AGUJEROS DE LAS TUERCAS DE 7/16 PARA SUJETAR LA UNIDAD A LA PARED
TROUS D'ÉCROUS 7/16 POUR FIXER L'APPAREIL AU MUR

****NEW INSTALLATIONS MUST USE GROUND FAULT CIRCUIT INTERRUPTER (GFCI)**
****Las nuevas instalaciones deben utilizar el interruptor de circuito de tierra de la avería (GFCI)**
****Les nouvelles installations doivent employer l'interrupteur de circuit moulu de défaut (GFCI)**

Fig. 5

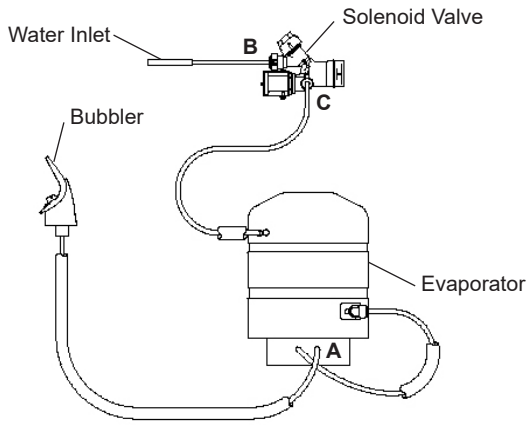

EZ Non-Pressurized Plumbing Diagram

Fig. 6

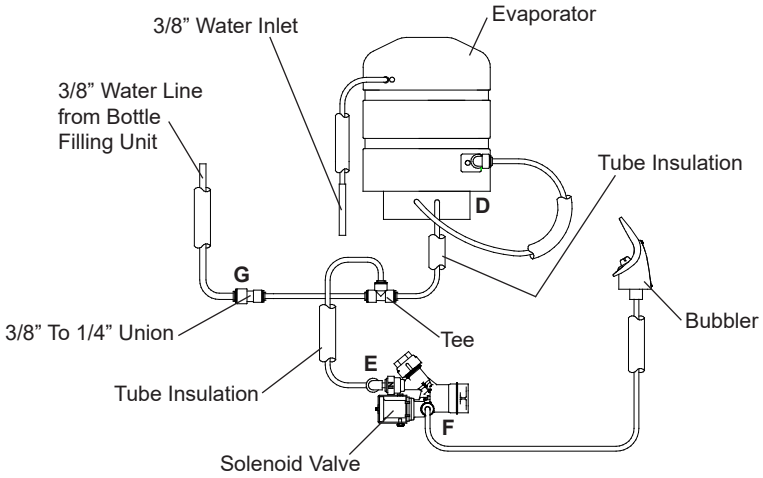

EZ Plumbing Diagram after Pressurization Modifications

Fig. 7

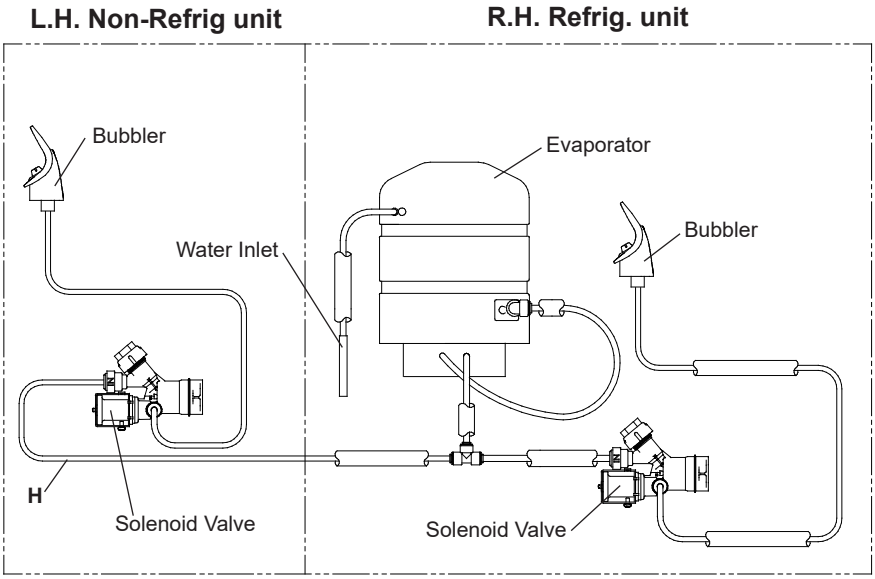

Standard EZ Bi-Level Pressurized Plumbing Diagram

Fig. 6A

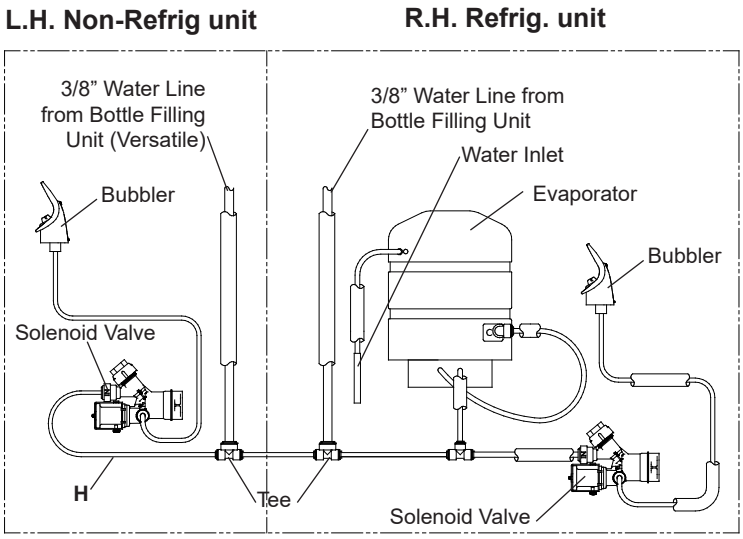

EZ Bi-Level Plumbing Diagram after Bottle Filler Water Line Addition

Fig. 7A

Plumbing Diagrams for EZ Coolers w/model no's ending with 1, 1A, 2, & 3

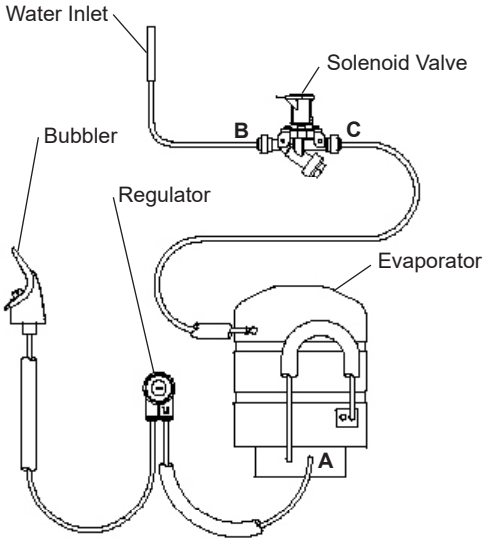

EZ Non-Pressurized Plumbing Diagram
Fig. 6B

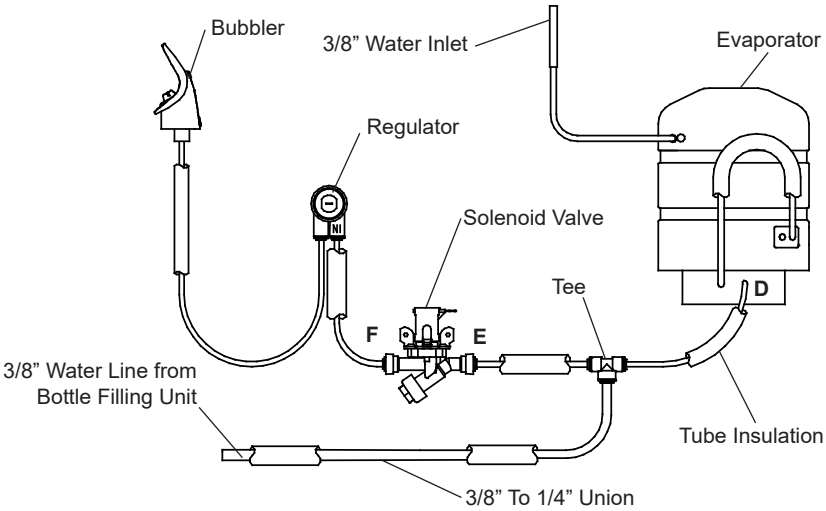

EZ Plumbing Diagram after Pressurization Modifications
Fig. 7B

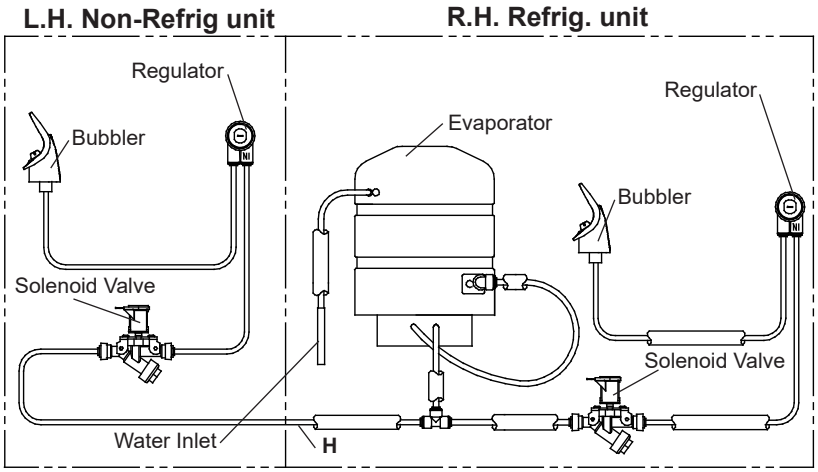

Standard EZ Bi-Level Pressurized Plumbing Diagram
Fig. 6C

EZ Bi-Level Plumbing Diagram after Bottle Filler Water Line Addition
Fig. 7C

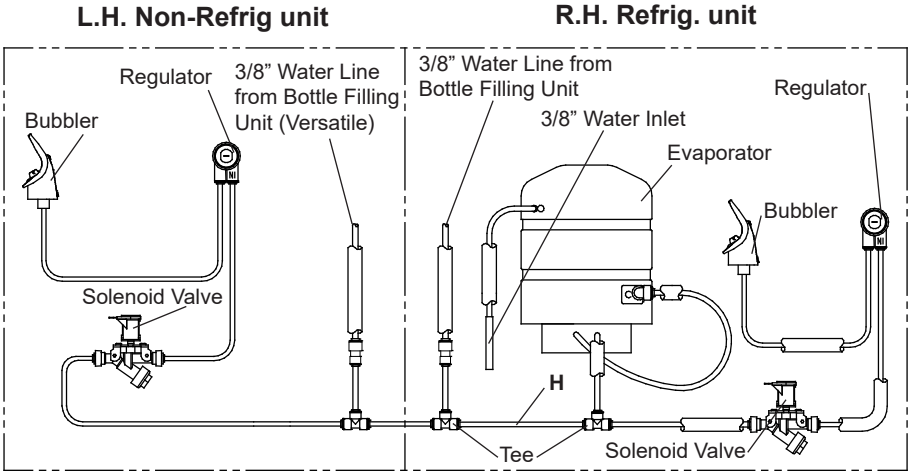

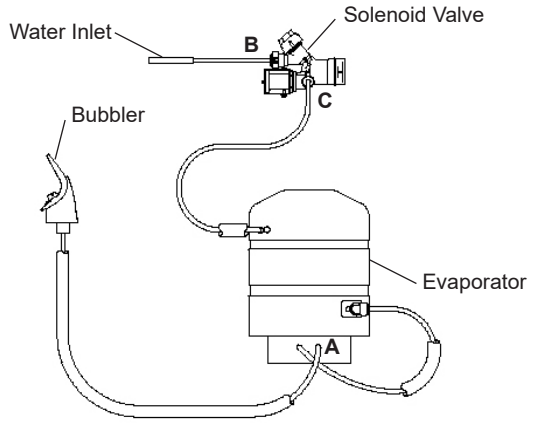

EZ Non-Pressurized Plumbing Diagram

Fig. 6D

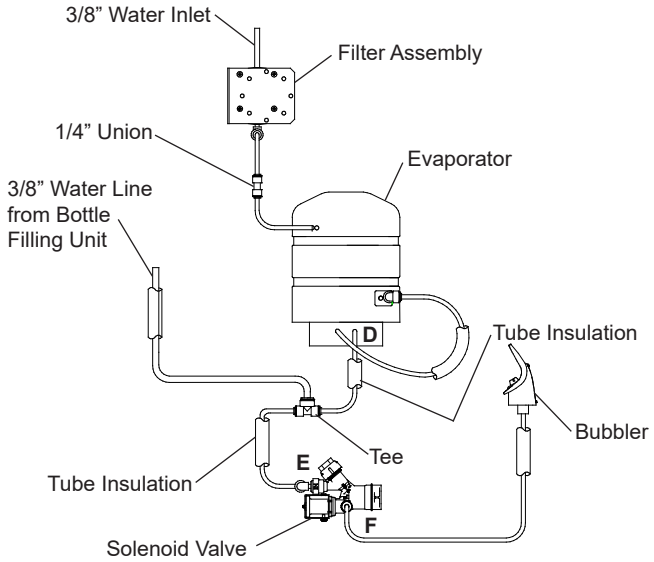

EZ Plumbing Diagram after Filter Installation & Pressurization Modifications

Fig. 7D

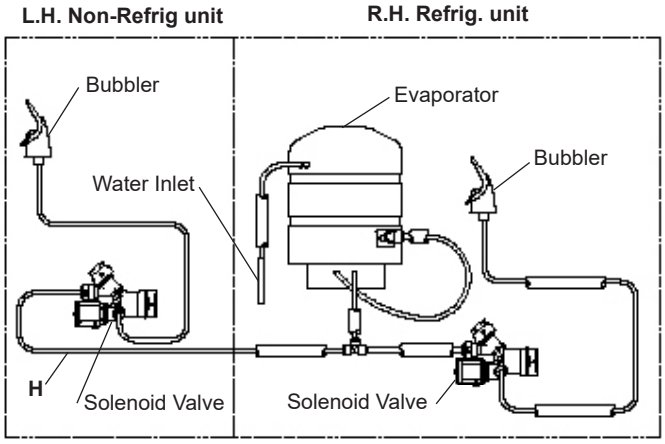

Standard EZ Bi-Level Pressurized Plumbing Diagram

Fig. 6E

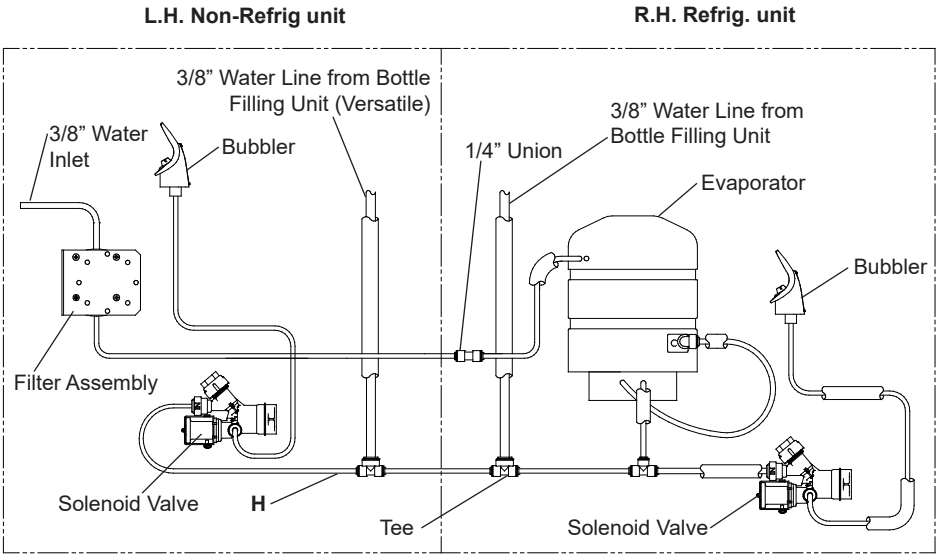

EZ Bi-Level Plumbing Diagram after Filter Installation & Bottle Filler Water Line Addition

Fig. 7E

Plumbing Diagrams for EZ Coolers w/model no's ending with 1, 1A, 2, & 3

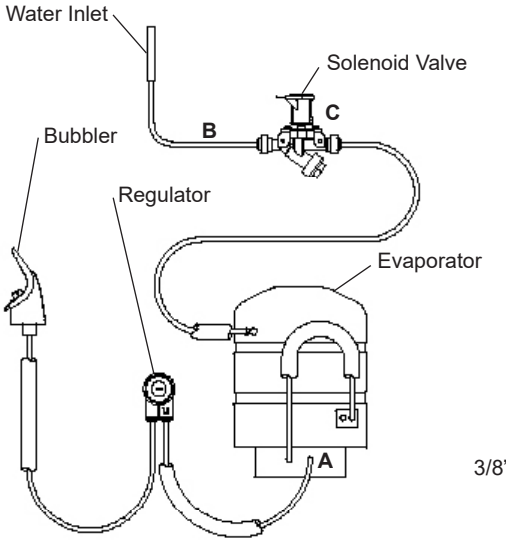

EZ Non-Pressurized Plumbing Diagram
Fig. 6F

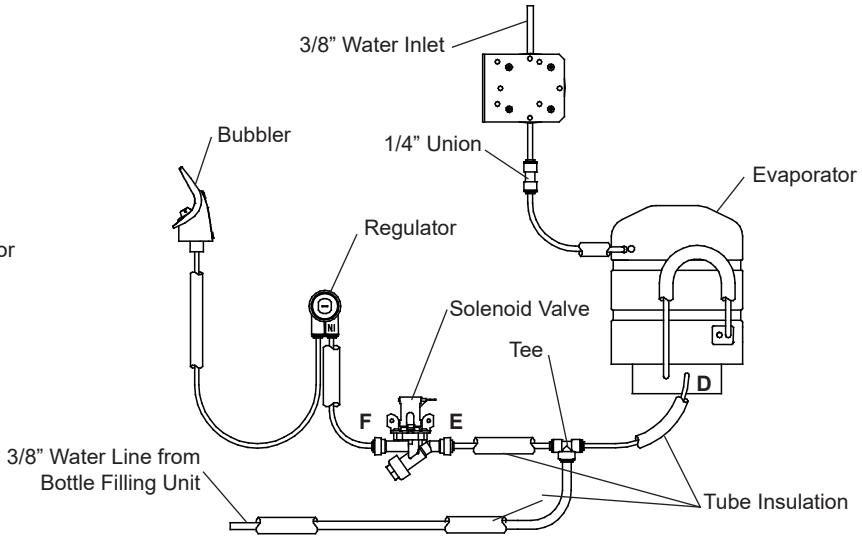

EZ Plumbing Diagram after Filter Installation & Pressurization Modifications
Fig. 7F

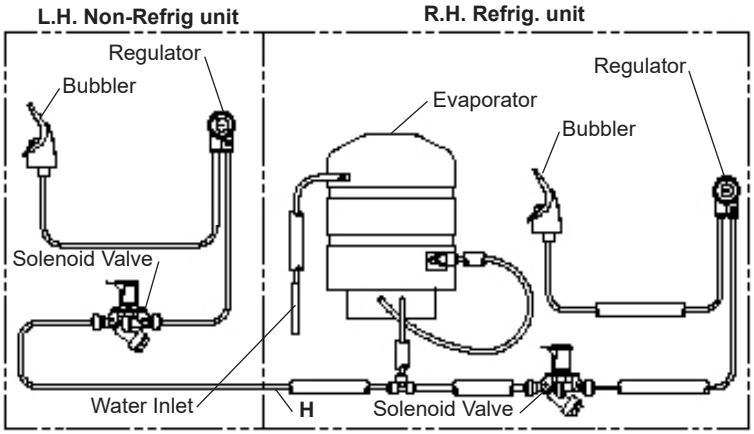

Standard EZ Bi-Level Pressurized Plumbing Diagram
Fig. 6G

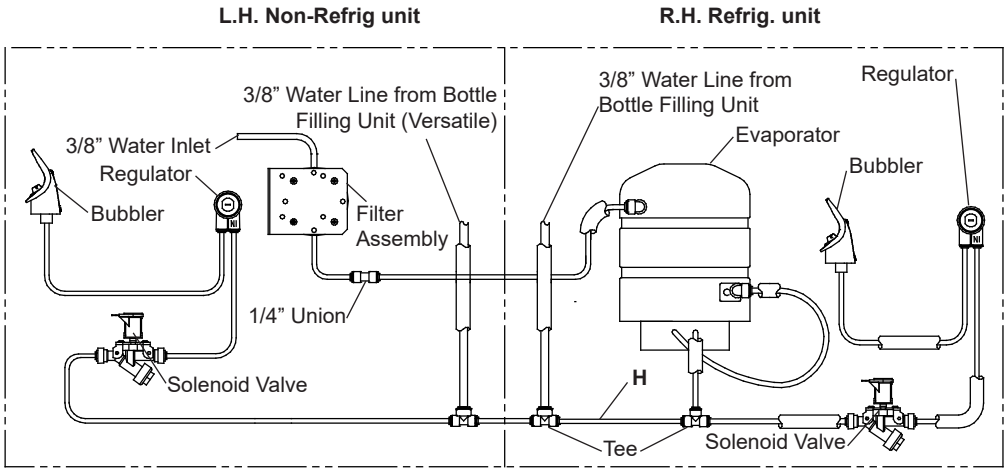

EZ Bi-Level Plumbing Diagram after Filter Installation & Bottle Filler Water Line Addition

Fig. 7G

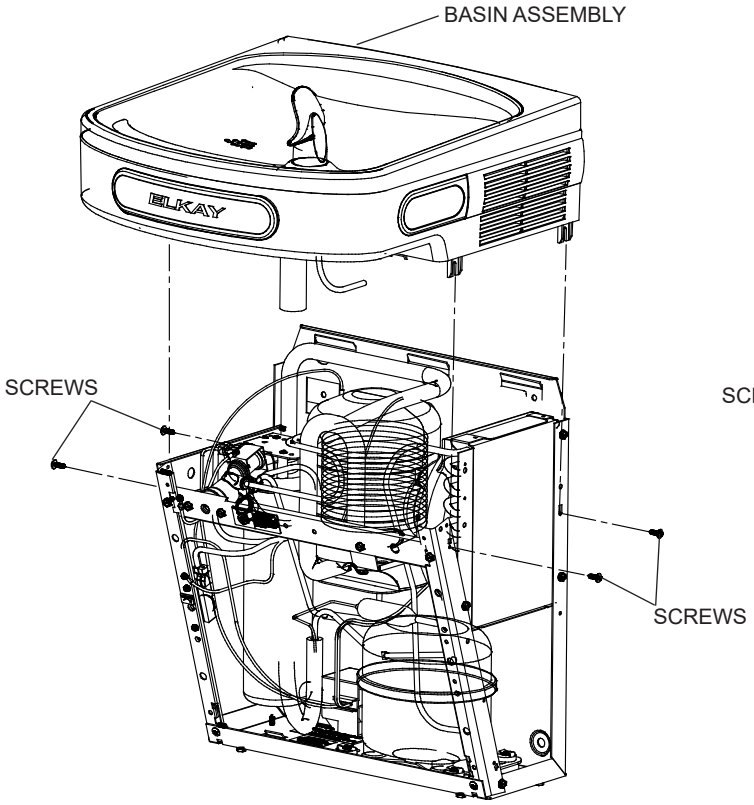

Basin Assembly Removal
Fig. 8

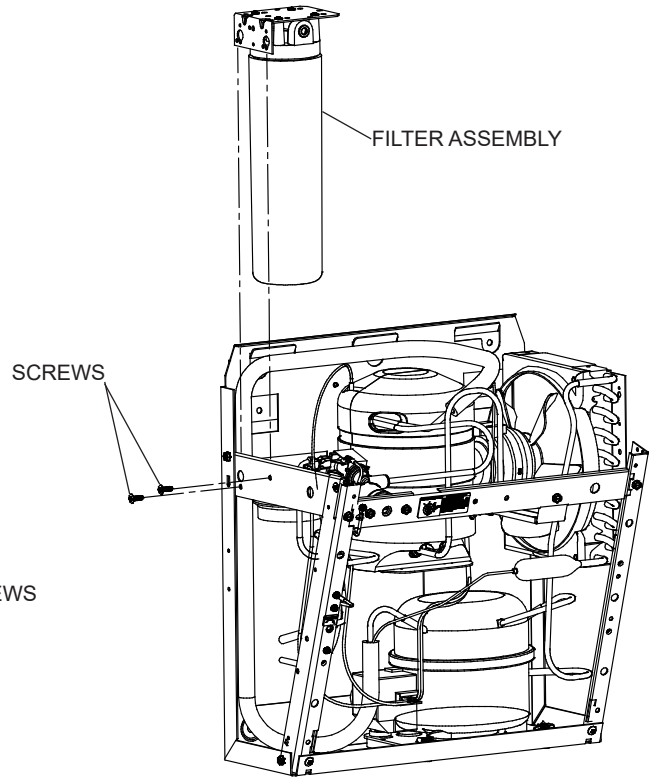

EWF3000 Filter Location
Fig. 9

BASIN ASSEMBLY PREPARATION

1. **Remove (4) screw**s from basin/shroud assembly. Separate basin from shroud.
2. Remove bubbler.
3. **Install bubbler** on new basin.
4. **Remove drain tail piece** from rubber boot that is attached to the shroud.
5. **Assemble shroud** onto new basin.
6. **Install branch line** drain tail piece to rubber boot. Connect hose clamp and drain hose to branch line on tail piece and tighten hose clamp.
7. **Reassemble Basin Assembly** back on to unit. Connect the bubbler water line to the outlet side of the solenoid valve “F” (See Fig. 7), be sure to reconnect the black wire from the pushbar assembly back to the piggyback terminal on the solenoid valve. and the other black wire back to the cold control or power cord (non-refrigerated unit) and reattach drain to the trap. Retighten the 4 screws two per side (See Fig. 8).

FOR UNITS WITH MODEL NO’S. ENDING IN 1, 1A, 2, & 3

7a. **Remove the white wire** from the cold control and connect it to the power cord white wire. Reassemble Basin Assembly back on to unit. Connect the regulator water line to the outlet side of the solenoid valve “F” (See Fig. 7B), be sure to reconnect one black wire from the pushbar assembly back to the piggyback terminal on the solenoid valve. Connect the other black wire from the pushbar assembly to the piggyback on the cold control. Reattach drain to the trap and reinstall drain support screw to front cross brace. Reinstall “L” bracket to top back of unit with the 2 screws it was mounted with. Retighten the 4 screws two per side (see Fig. 8).

ALL STANDARD Bi-Level MODELS

After completing instructions 1 thru 7 or 7a from above on the non-refrigerated side. Install filter head assembly per previous installation instructions and reinstall basin assembly to the non-refrigerated side, re-attach wiring, bubbler tube (or regulator tube) to solenoid valve and reinstall the Bi-Level cover plate to the left side of the unit. Reinstall non-refrigerated unit to wall and reinstall drain.

ALL Bi-Level Versatile MODELS

After completing instructions 1 thru 7 or 7a from above on the refrigerated side. Install filter head assembly per previous installation instructions and reinstall basin assembly to the non-refrigerated side, re-attach wiring, bubbler tube (or regulator tube) to solenoid valve and reinstall the Bi-Level cover plate to the left side of the unit. Reinstall non-refrigerated unit to wall and reinstall drain.

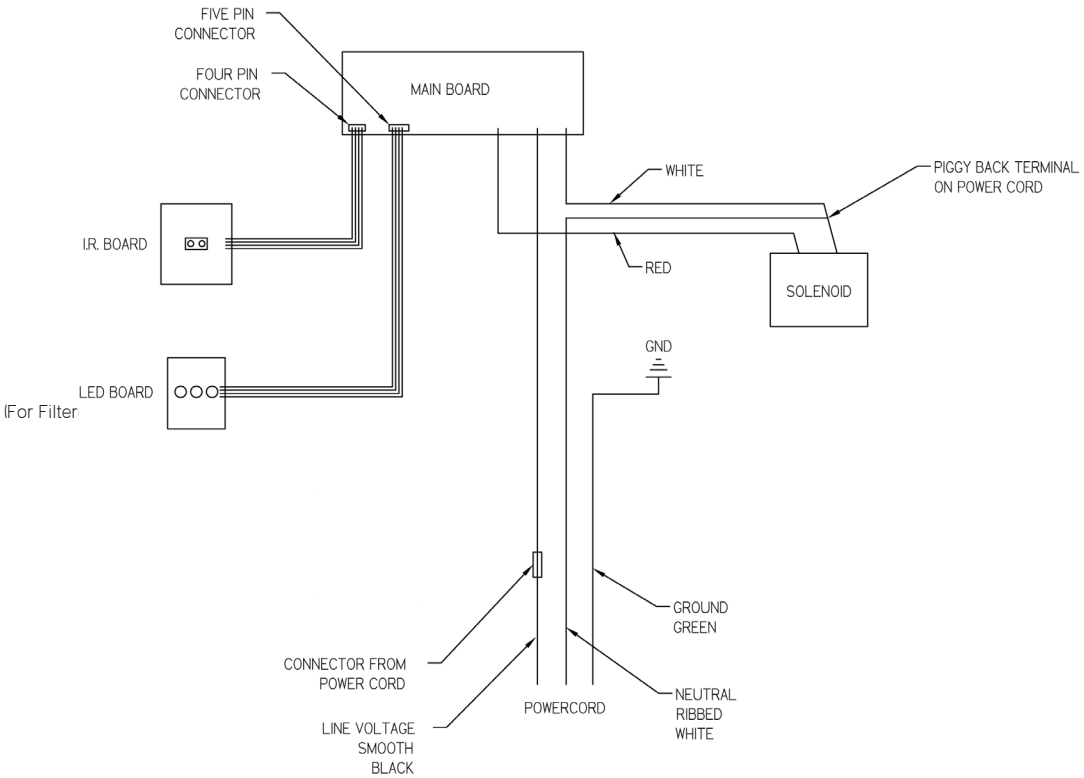

WIRING DIAGRAM - BOTTLE FILLER 115V

NOTE: UNITS PRODUCED 2008 AND BEFORE WILL NEED ADAPTERS TO SWITCH LINE AND NEUTRAL WIRES.

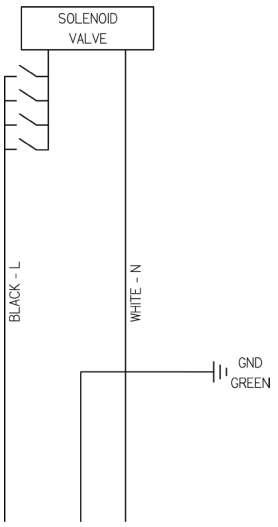

WIRING DIAGRAM - NON REFRIGERATED SIDE

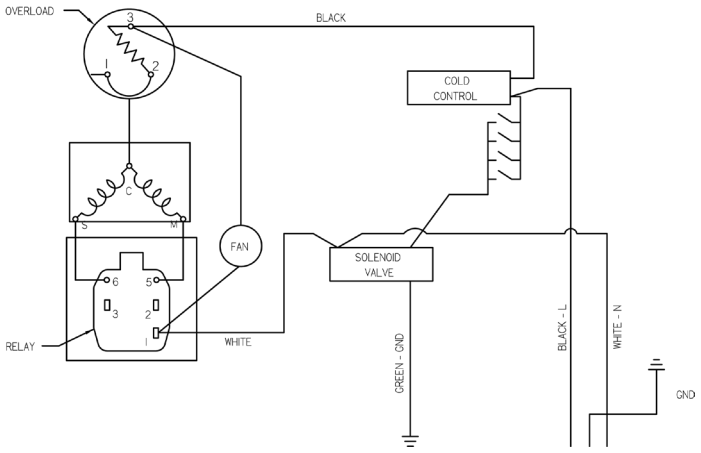

WIRING DIAGRAM - REFRIGERATED SIDE

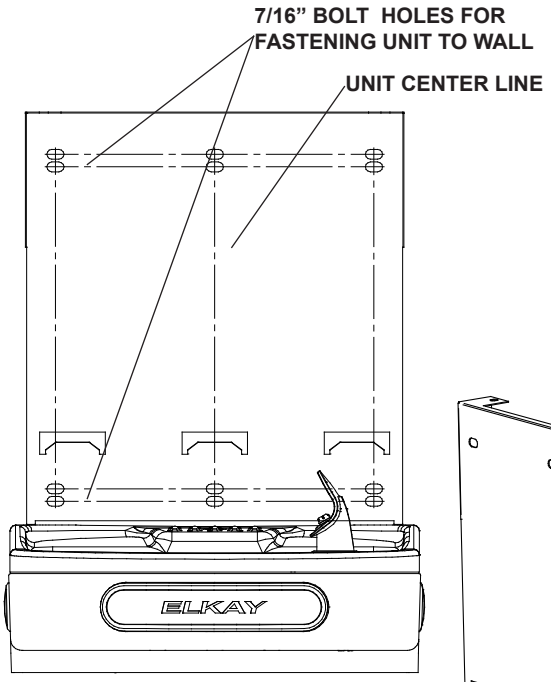

Fig. 10

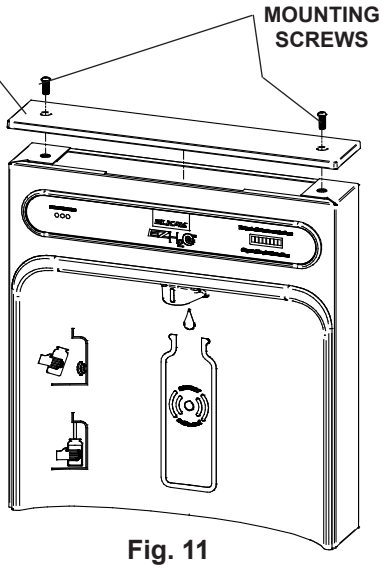

Fig. 11

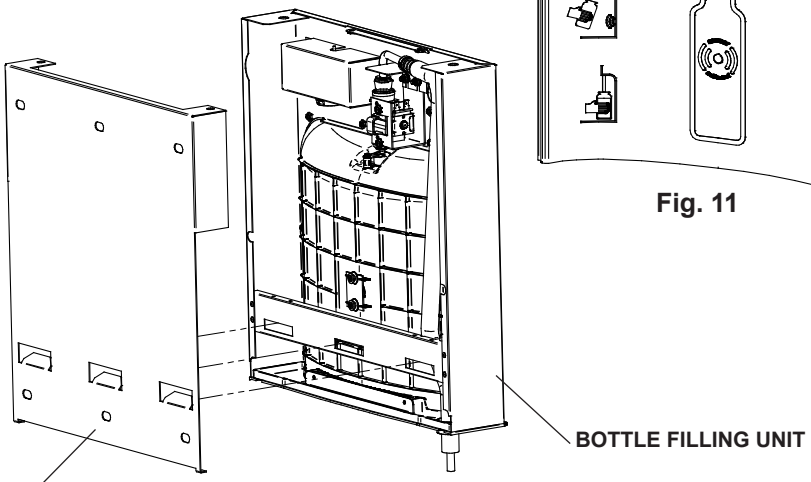

Fig. 12

BOTTLE FILLER INSTALLATION

1. **Remove two (2) mounting screws** with 5/32” Allen wrench holding top cover to Bottle Filler (See Fig. 11). Remove top cover. Note do not discard mounting screws, they will be needed to reinstall top cover.
2. **Remove wall mounting plate** from Bottle Filler. Place wall plate against wall on top of basin. Center the wall plate side to side with the basin. Mark the six (6) mounting holes with a pencil (See Fig. 10).
3. **Remove wall mounting plate** from wall. **NOTE:** Mounting plate MUST be supported securely. Add fixture support carrier if wall will not provide adequate support.
4. Install wall mounting plate to wall using six (6) 7/16” obround mounting holes (mounting bolts not included) (See Fig. 10). Use appropriate fasteners for your wall type.
5. **Feed power cord** & 3/8” water line through hole in tower/basin gasket (See Fig. 13).
6. **Install gasket on the bottom** of bottle filler tower by pushing detents into place (See Fig. 14).
7. **Lay Bottle Filler on water cooler basi**n and cut insulation from tube even with bottom of gasket, remove this insulation from the 3/8” tube, but do not discard. Feed the power cord and waterline through the hole on top of water cooler. NOTE: To prevent scratching the basin place a towel or soft cloth over the entire basin when working above it.
8. **With the power cord,** wire(s), and waterline through hole on top of water cooler place Bottle Filler on the three (3) angled tabs protruding from the wall (See Fig. 12) mounting plate installed on wall. Make sure round boss in gasket fits in hole of basin.
9. **Once Bottle Filler** is installed on wall plate tabs, make sure the waterline, wire(s) and power cord are installed properly. Inspect for leaks, fix all leaks before continuing. Push top of Bottle Filler toward wall and line up top cover two (2) holes.
10. **Reinstall Top Cover** on Bottle Filler (See Fig. 11) with two mounting screws from step 1 above. Caution, do not over tighten screws.
11. **Install remaining tube insulation** to the water line from bottle filler, connect Bottle Filler waterline inside of the water cooler by connecting the 3/8” water line to the tee.
12. **Install filter cartridge,** remove filter from carton, remove protective cap, attach filter to filter head by firmly inserting into head and rotating filter clockwise.

NOTE: If existing plumbing rough-in locations (Drain, Water In, and Electric Supply) do not allow the filter to be mounted inside the cooler cabinet the filter can be installed horizontally below the unit. A retrofit kit is available to mount the filter beneath the cooler (See Page 18, Fig. 19).

13. **Turn water supply on** and inspect for leaks. Fix all leaks before continuing.
14. **Once unit has been inspected** for leaks and any leaks found corrected, plug Bottle Filler and Cooler Unit into wall. For correct Electrical Cord Routing and Connections (See Fig. 20) be sure to reinstall fuse to the circuit or switch the circuit breaker back to the “ON” position.
15. **Once power is applied to Bottle Filler,** the GREEN LED light should illuminate showing good filter status along with the LCD Bottle Counter.
16. **Verify proper dispensing** by placing cup, hand, or any opaque object in front of sensor area and verify water dispenses. Note: the first initial dispenses might have air in line which may cause a sputter. This will be eliminated once all air is purged from the line.
17. **Once unit tests out,** install Lower Panel back on water cooler. Unit is now ready for use.

BOTTLE FILLER GASKET

Fig. 13

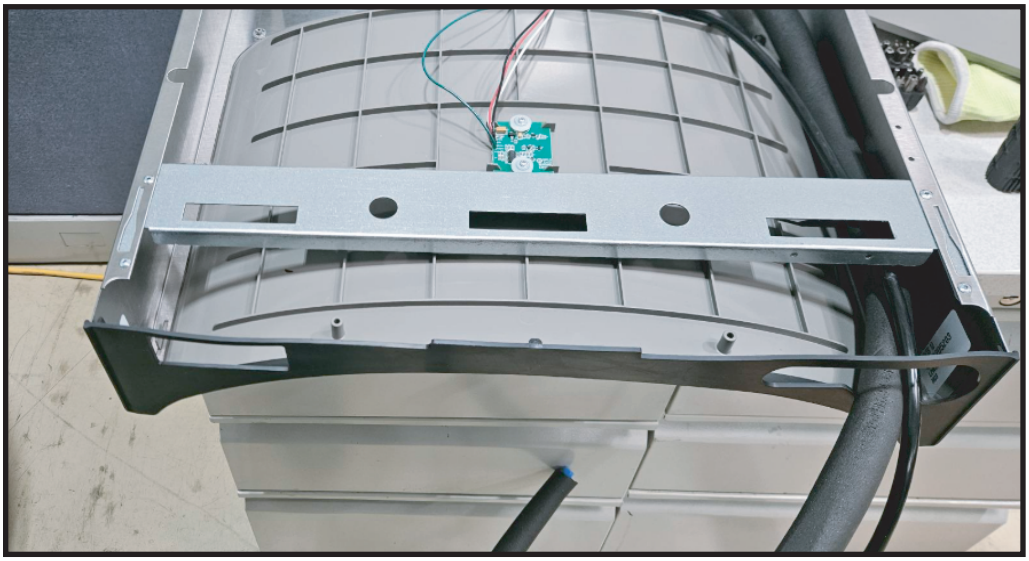

Fig. 14

WIRING MODIFICATION FOR NON-REFRIGERATED UNIT IN A BI-LEVEL COOLER IF BOTTLE FILLER COUNTER CONTINUOUSLY ADVANCES

1) DISCONNECT POWER TO ALL UNITS BEFORE PROCEEDING!
2) Disconnect ribbed wire (powercord) from the switch wire (from pushbar), add the female to female adapter to wire.
3) Remove the smooth larger black wire (powercord) from the solenoid valve. Connect ribbed wire with female adapter from step 2 to where the smooth black wire was connected.
4) Add the male to male adapter to the smooth wire removed in step 3.
5) Connect the smooth black wire with male adapter to the switch wire (from pushbar) removed in step 2.
6) Reconnect power to all units. Verify bottle filler counter advances only when water is flowing.
7) Once unit tests out, install lower panels back on water cooler. Units are ready for use.

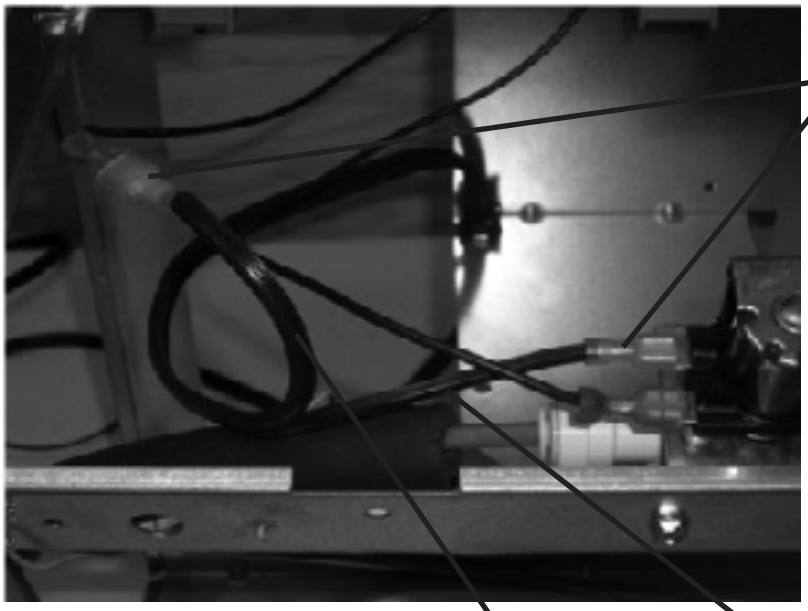

Fig. 15

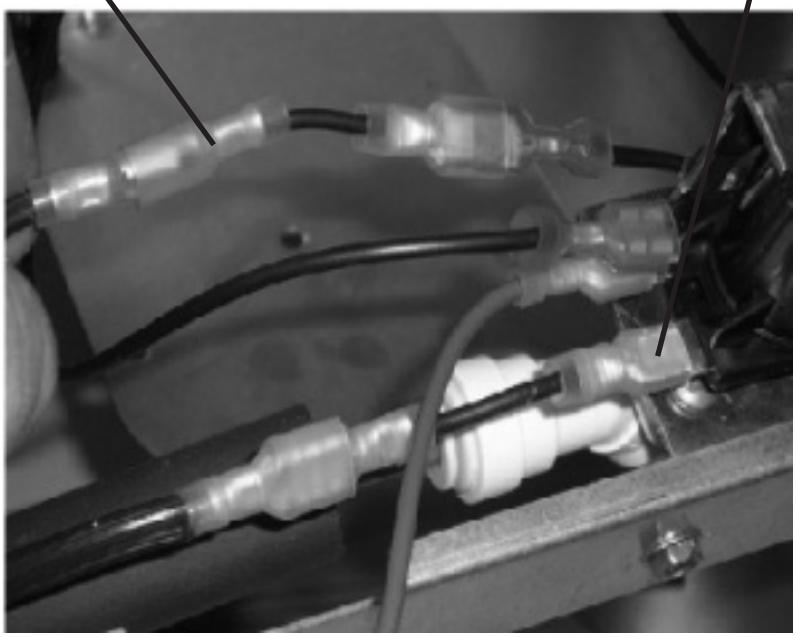

UNIT WITH WIRE ADAPTERS ADDED AND WIRED CORRECTLY

Fig. 16

PLUMBING DIAGRAMS
VERSATILE BI-LEVEL

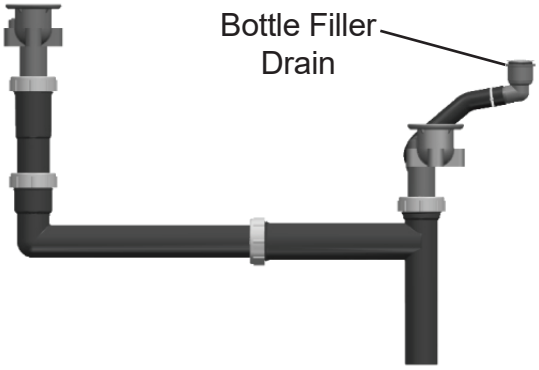

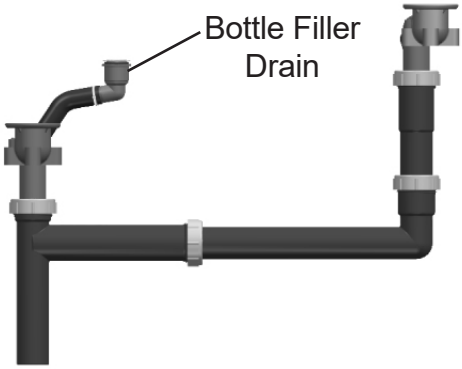

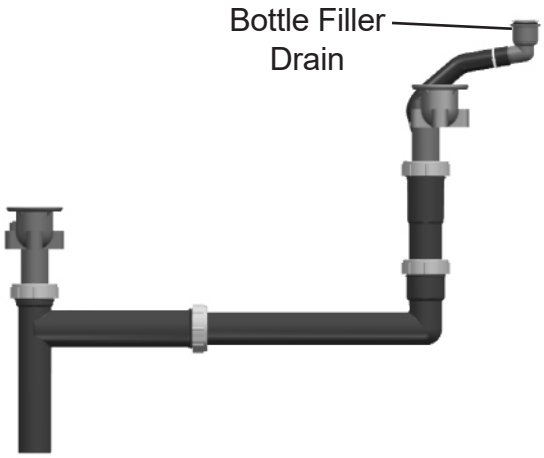

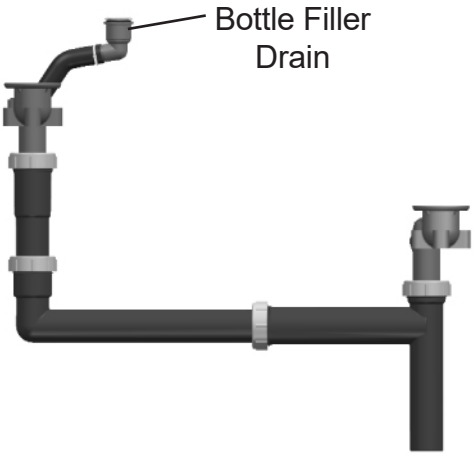

Fig. 17

BF11 - BF12 PROGRAM
SETTING THE CONTROL BOARD

VERIFY CONTROL BOARD SOFTWARE

1) To verify the software program of the control board the unit will need to be shut down and restarted. The chiller (if present) does not need to be shut down and restarted.
2) The units lower panel must be open to access the power cord and wall outlet.
3) Shut down the unit by unplugging the power cord from the wall outlet.
4) Restart the unit by plugging the power cord back into the wall outlet.
5) Upon start up, the bottle count display will show the software designation of BF11 or BF12.

ACCESSING THE PROGRAMMING BUTTON

1) To access the program button, remove the top cover of the bottle-filler. Remove the two (2) screws holding top cover to bottle-filler with a 5/32" allen wrench. Remove top cover. Do not discard mounting screws, they will be needed to reinstall the top cover after programming operations are completed. The programming button is located at the top right side of the unit on the control board.
NOTE: When applicable, there is also an alternate reset button located on the lower part of the water cooler. After removing the bottom cover, the reset button will be located on the left side of the cooler, mounted on the side panel support.

RESET THE FILTER MONITOR

1) Instructions apply to filtered units only.
2) Depress the program button for approximately 2 seconds until the display changes then release. The display will change and scroll through two messages:
"RST FLTR" – Reset Filter Monitor
"SETTINGS" – System Settings Sub Menu
If the program button is not pushed again the display will scroll through the two messages above for three cycles and then default back to bottle count and be back in run mode.
3) When the display changes to "RST FLTR", depress the button again. The display will change to show "FLTR =". Depress the button again and the display will show "FLTR =0"
4) The Green LED should be illuminated indicating that the visual filter monitor has been reset.

SETTING RANGE OF THE IR SENSOR WHERE APPLICABLE

1) Depress the program button for approximately 2 seconds until the display changes then release. The display will change and scroll through two messages:
"RST FLTR" – Reset Filter Status LED
"SETTINGS" – System Settings Sub Menu
If the program button is not pushed again the display will scroll through the two messages above for three cycles and then default back to bottle count and be back in run mode.
2) When the display changes to "SETTINGS", depress the button again. The display will change to show
"RNG SET" - Range set for IR sensor.
"UNIT TYP" - Type of unit (REFRIG or NON-RFRG)
"FLT SIZE" - Select filter capacity
"RST BCNT" - Reset bottle count
3) When display shows "RNG SET" push program button once the display will show current value (can be 1 – 10) e.g. "RNG = 3".
4) Once display shows current value push the program button to scroll through value of 1 – 10. Select the desired range setting, "1" being closest to sensor and "10" being farthest away.
5) Once range is selected allow approximately 4 seconds to pass and then the display will go back to bottle counter and be in run mode.
6) Test bottle filler by placing bottle or hand in front of sensor to make sure water is dispensed.

SETTING UNIT TYPE

1) Depress the program button for approximately 2 seconds until the display changes then release. The display will change and scroll through two messages:
"RST FLTR" – Reset Filter Status LED
"SETTINGS" – System Settings Sub Menu
If the program button is not pushed again the display will scroll through the two messages above for three cycles and then default back to bottle count and be back in run mode.

Continued from below:

2) When the display changes to "SETTINGS", depress the button again. The display will change to show
"RNG SET" - Range set for IR sensor.
"UNIT TYP" - Type of unit (REFRIG or NON-RFRG)
"FLT SIZE" - Select filter capacity
"RST BCNT" - Reset bottle count
3) When display shows "UNIT TYPE" push program button once the display will show current value. Can be REFRIG or NON-RFRG
4) Push button once to change value. Once value is selected the display will show the new value. (Can be REFRIG or NON-RFRG)
"REFRIG" - stands for refrigerated product. In this setting the flow rate is estimated at 1.0 gallon per minute.
"NON-RFRG" - stands for nonrefrigerated product. In this setting the flow rate is estimated at 1.5 gallons per minute. Both "REFRIG" and "NON-RFRG" simulate 1 bottle equal to 20 oz.
5) Allow approximately 4 seconds to pass and the display will return to bottle counter and be in run mode.

RESETTING BOTTLE COUNT

1) Depress the program button for approximately 2 seconds until the display changes then release. The display will change and scroll through two messages:
"RST FLTR" – Reset Filter Status LED
"SETTINGS" – System Settings Sub Menu
If the program button is not pushed again the display will scroll through the two messages above for three cycles and then default back to bottle count and be back in run mode.
2) When the display changes to "SETTINGS", depress the button again. The display will change to show:
"RNG SET"- Range set for IR sensor.
"UNIT TYP" - Type of unit (REFRIG or NON-RFRG)
"FLT SIZE" - Select filter capacity
"RST BCNT" - Reset bottle count
If the button is not pushed again the display will scroll through the four messages above for three cycles and return to run mode.
3) When display shows "RST BCNT" push program button once the display will show current value, e.g. "0033183".
4) Once display shows current value push the program button once more to reset back to 0. The display will show BTLCT = 0 for approximately 2 seconds and then return to run mode showing 00000000 bottles.
NOTE: Once the bottle count is reset to zero there is no way to return to the previous bottle count.
5) Testing the bottle counter:
REFRIG units: Place bottle or hand in front of sensor for approximately 9 seconds to see bottle counter count 00000001,
(This is based on filling a 20 oz. bottle).
NON-RFRG units: Place bottle or hand in front of sensor for approximately 6 seconds to see bottle counter count 00000001,
(This is based on filling a 20 oz bottle).

SETTING FILTER CAPACITY

1) Depress the program button for approximately 2 seconds until the display changes then release. The display will change and scroll through two messages:
"RST FLTR" – Reset Filter Status LED
"SETTINGS" – System Settings Sub Menu
If the program button is not pushed again the display will scroll through the two messages above for three cycles and then default back to bottle count and be back in run mode.
2) When the display changes to "SETTINGS", depress the button again. The display will change to show:
"RNG SET"- Range set for IR sensor.
"UNIT TYP" - Type of unit (REFRIG or NON-RFRG)
"FLT SIZE" - Select filter capacity
"RST BCNT" - Reset bottle count
If the button is not pushed again the display will scroll through the four messages above for three cycles and return to run mode.
3) When display shows "FLT SIZE" push program button once. The display will show current value. Can be 3000GAL or 6000GAL.
4) Push program button again to display the desired "FLT SIZE".
5) Allow approximately 4 seconds to pass and the display will return to bottle counter and be in run mode.

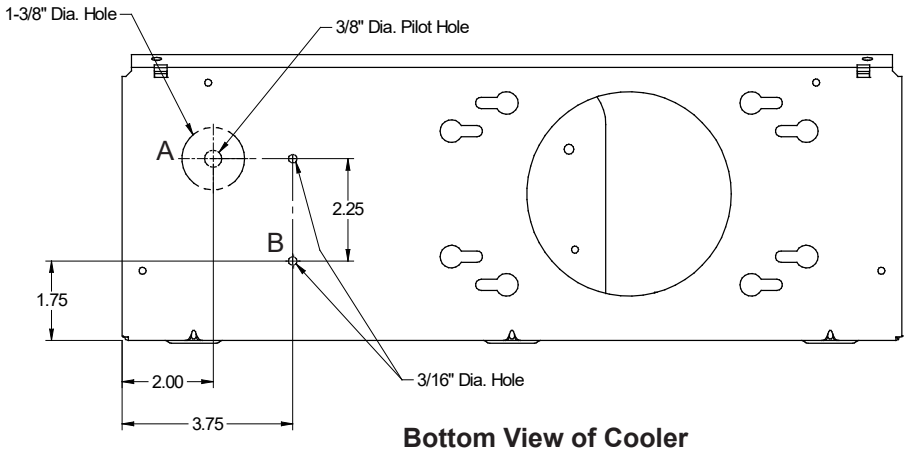

Bottom View of Cooler
Fig. 18

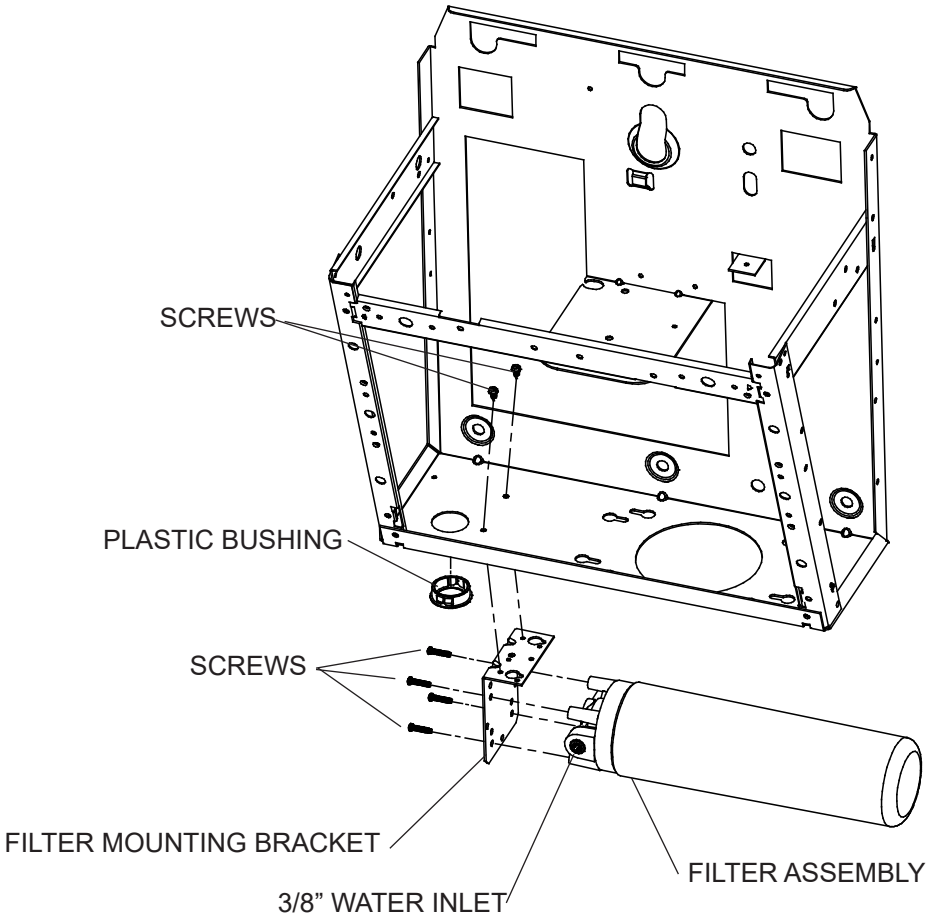

Alternate Filter Mounting Location
Fig. 19

ALTERNATE FILTER MOUNTING LOCATION

1) Drill one 3/8" diameter pilot hole "A" as shown in Fig. 18.
2) Using the 1-3/8" dia. punch supplied with 98552C Kit - Retro Filter Mounting, punch a 1-3/8" dia. hole "A" at the 3/8" pilot hole, see Fig. 18.
3) Drill two 3/16" dia. hole at location "B" shown in Fig. 18.
4) Remove Filter bracket from filter assembly and reinstall as shown in Fig. 19. Be sure the 3/8" water inlet is facing out.
5) Install plastic bushing (supplied) as shown into 1-3/8" hole, bushing must be used so waterlines will not be cut by sharp edges of base plate.
6) Install filter assembly to bottom of cooler as shown in Fig. 19 with 2-#8 sheet metal screws.
7) Run the inlet and outlet water lines to filter.
8) Use P/N 98551C KIT- LZ Filter Mounting Cover (Light Gray Granite), or P/N 98568C KIT- LZ Filter Mounting Cover (Stainless Steel), may be order to enclose the filter beneath the cooler (Not Shown).

Standard Rough-In Primary Outlet Location

Standard Rough-In Alternate Outlet Location

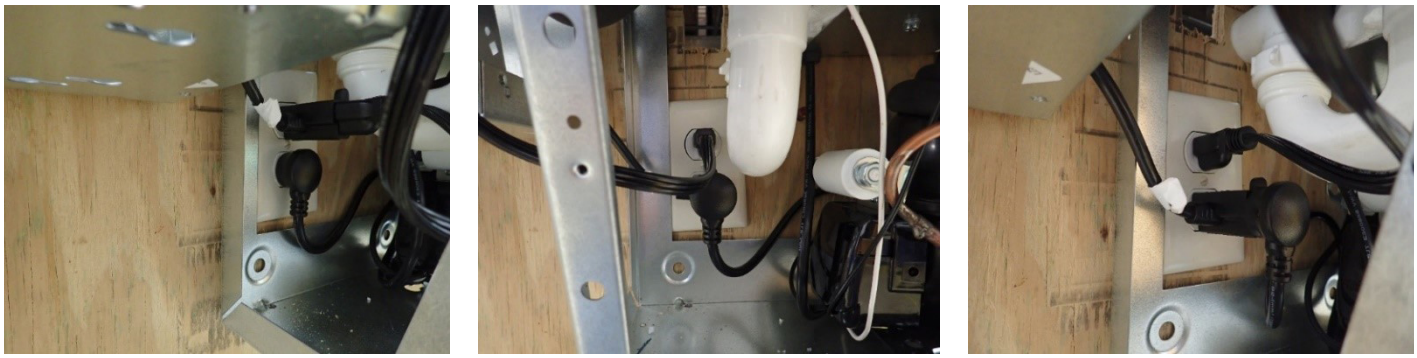

Reverse Rough-In Primary Outlet Location

Reverse Rough-In Alternate Outlet Location

Fig. 20

OPERATION OF QUICK CONNECT FITTINGS

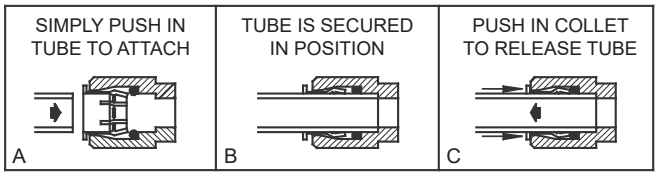

PUSHING TUBE IN BEFORE PULLING IT OUT HELPS TO RELEASE TUBE

Fig. 21

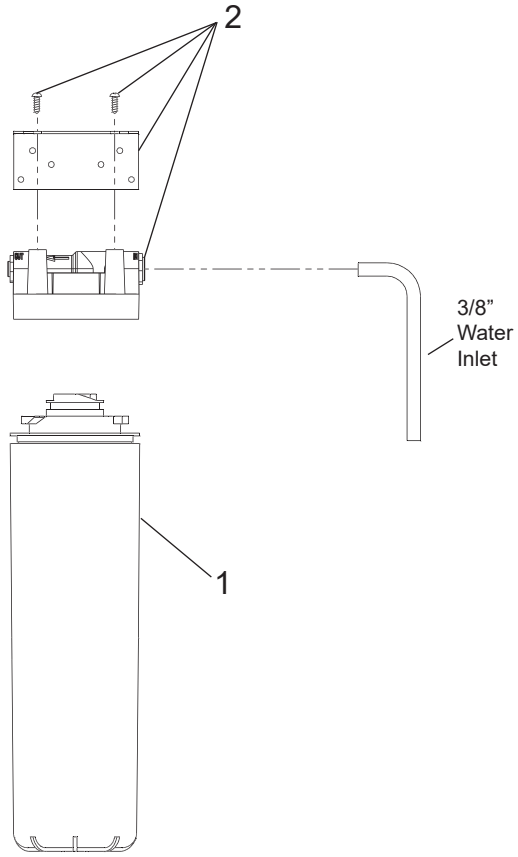

Filter Head Assembly used after 01/01/2021

Fig. 22

WATERSENTRY® PLUS FILTER PARTS LIST (See Fig. 22)		
ITEM NO.	PART NO.	DESCRIPTION
1	51300C	Filter Assy-3000 Gal.
2	0000000746	Assy-Filter & Brkt includes Filter Head/Mtg Brkt/ John Guest Fittings/Screws

Scan for troubleshooting information and to subscribe to automatic filter replacements at a discount.

REPLACEMENT PART KITS	
PART NO.	DESCRIPTION
98543C	Kit - Electrical Package 115V
98631C	Kit - Electrical Package 220V
98544C	Kit - IR Sensor 115V
1000004573	Kit - Solenoid Valve Replacement 115V
1000004574	Kit - Solenoid Valve Replacement 220V
98546C	Kit - Aerator Replacement
98547C	Kit - Top Cover Replacement
1000001813	Kit - Drain Tower/Basin Gasket
98549C	Kit - Hardware & Waterway Parts
98551C	Kit - LZ Filter Mounting Cover (L)
98568C	Kit - LZ Filter Mounting Cover (S)
98552C	Kit - Retro Filter Mounting
0000001337	Kit - Basin Replacement
1000001812	Kit - Bottle Filler Drain
1000001877	Kit - Drain Replacement
1000006147	Cord - 115V Power

1000004729

Patent zurnelkay.com/patents

PRINTED IN U.S.A.

REPAIR SERVICE INFORMATION TOLL FREE NUMBER 1.800.260.6640
FOR PARTS, CONTACT YOUR LOCAL DISTRIBUTOR OR CALL 1.800.834.4816
ELKAY MANUFACTURING CO. • 1333 BUTTERFIELD ROAD SUITE 200 • DOWNERS GROVE • IL 60515 • USA 630.574.8484 • www.elkay.com