# ELKAY® Installation Manual

*ezH2O® Liv Pro Commercial Built-in Water Dispenser 115-120V*

Ambient with Filter Box Configuration

LBWDC00BKC

LBWDC00WHC

Chilled (Optional) with Remote Filter Configuration

# Table of Contents


**1. General Information . . . . . 3**
- 1.1 Installation Manual . . . . . 3
- 1.2 Models Covered in Manual . . . . . 3
- 1.3 Serial Number Location . . . . . 4
- 1.4 Contact Information. . . . . 4
- 1.5 Disclaimer . . . . . 4
- 1.6 Notice of Changes . . . . . 4
- 1.7 Radio Frequency Compliance. . . . . 4
- 1.8 Warranty . . . . . 4

**2. Safety . . . . . 5**
- 2.1 General . . . . . 5
- 2.2 Safety Alert Symbol. . . . . 5
- 2.3 Personal Safety. . . . . 5
- 2.4 Property Damage . . . . . 6

**3. Installation Preparation . . . . . 7**

**4. Installation . . . . . 8**
- 4.1 Tools Required . . . . . 8
- 4.2 Installer Supplied Parts Required . . . . . 8
- 4.3 Critical Depth Check and Cutting Size Mounting Dimensions . . . . . 8
  - 4.3.1 Water Dispenser with Filter Box. . . . . 8
  - 4.3.2 Water Dispenser without Filter Box . . . . 9
  - 4.3.3 Plumbing and Electrical Key . . . . . 9
- 4.4 Water Dispenser Installation . . . . . 10
  - 4.4.1 Installing Water Dispenser . . . . . 10
  - 4.4.2 Installation of Filter Box . . . . . 11
  - 4.4.3 Connecting the Water Lines. . . . . 12
  - 4.4.4 Installing Remote Filter . . . . . 13
- 4.5 Installing Remote Water Chiller (optional). . . 14
- 4.6 Connecting Catch Basin Waste Drain (optional) . . . . . 15

**5. Startup . . . . . 17**

**6. Troubleshooting. . . . . 20**

**7. Frequently Asked Questions (FAQ) . . . . . 20**


# 1. General Information

## 1.1 Installation Manual

Read all instructions carefully BEFORE starting the installation and familiarize yourself with the various parts of this product.

The installation of this product requires electrical and plumbing connections that use specific skills and knowledge. If you are unsure or not qualified to make these connections, consult a qualified plumber, electrician, or installer. Professional installation is suggested.

This manual contains step-by-step installation instructions for the In-wall Water Dispenser. Followed carefully, these instructions will result in trouble-free installation of this Elkay Manufacturing Company (Elkay) product. Additional use and care documents can be found on the Elkay website at ***http://www.elkay.com/support***.

Any deviations, additions, or deletions from the described methods, without the prior written approval of our Customer Care department, will void the warranty covering this product.

Make sure the installation and use of this product meet all local, state, and federal plumbing and electrical codes.

**⚠ WARNING**

**Carefully read, understand, and follow all the instructions in this manual before using the product. Improper installation, use, or maintenance of this product could cause a dangerous situation resulting in personal injury or even death.**

**Do not operate power tools unless you read and understand the instructions and warnings in this and all other applicable manuals. Proper use of tools and the products described in this manual is your responsibility.**

***NOTICE*** **Failure to follow these instructions could also cause a situation that results in water damage, or other damage to floors, walls, pipes, or electrical wiring.**

## 1.2 Models Covered in Manual

| | |
|---|---|
| LBWDC00BKC | Midnight |
| LBWDC00WHC | Aspen White |

## 1.3 Serial Number Location

Please locate the serial number located under the front panel, as shown and use this serial number when contacting us with questions concerning the installation of this product.

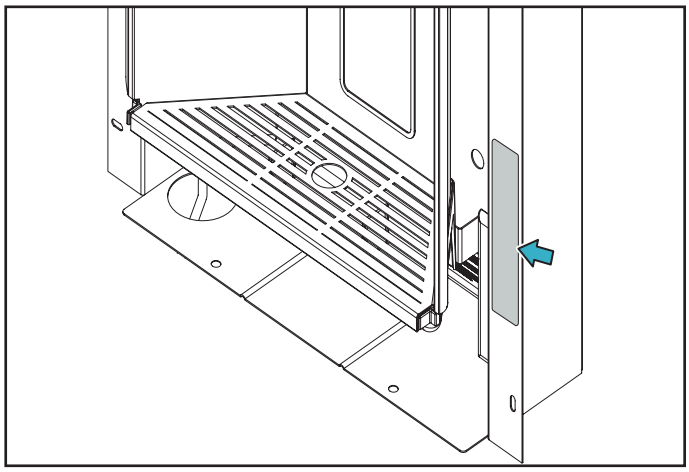

## 1.4 Contact Information

**General Information**
Elkay Manufacturing Company
1333 Butterfield Road
Suite 200 Downers Grove, IL 60515

Phone: 630.574.8484
Email: consumer@elkay.com
Website: http://www.elkay.com

**USA/Canada Customer Care**
Phone: 800.476.4106
Phone: 800.260.6640 (Repair Service)
Email: CustCare@Elkay.com

**International Customer Care**
Phone: 630.575.4755
Email: IntlCare@Elkay.com

**Installation Services**
Phone: 800.952.8064
Email: installservice@elkay.com
Website: http://www.elkay.com/contact-us/install

## 1.5 Disclaimer

The information contained in this manual is given free of charge. This information is based on reliable technical data and is intended for people with the technical knowledge to install, use, and maintain this product at their own discretion and risk. Elkay assumes no responsibility for results obtained or damage incurred from the use of this material either in whole or in part by the buyer.

## 1.6 Notice of Changes

The information, specifications, and illustrations in this manual are based on the information that was available at the time this material was written and can change at any time.

Dimensions are given in inches (") and millimeters (mm).

## 1.7 Radio Frequency Compliance

The water dispenser and filter communicate with each other through a Near Field Communication (NFC) device. This short-range, wireless connectivity technology is designed to monitor the status of the filter and to alert the user when it is time to change the filter.

This device complies with part 15 of the FCC Rules. Operation is subject to the following two (2) conditions: (1) This device may not cause harmful interference, and (2) this device must accept any interference received, including interference that may cause undesired operation.

Changes or modifications not approved by the manufacturer could void the user's authority to operate the equipment.

This device complies with Industry Canada licence-exempt RSS standard(s). Operation is subject to the following two conditions: (1) this device may not cause interference, and (2) this device must accept any interference, including interference that may cause undesired operation of the device.

Le présent appareil est conforme aux CNR d'Industrie Canada applicables aux appareils radio exempts de license. L'exploitation est autorisée aux deux conditions suivantes: (1) l'appareil ne doit pas produire de brouillage, et (2) l'utilisateur de l'appareil doit accepter tout brouillage radioélectrique subi, même si le brouillage est susceptible d'en compromettre le fonctionnement.

This equipment complies with FCC radiation exposure limits set forth for an uncontrolled environment. The user should avoid prolonged exposure within 20 cm of the antenna, which may exceed the FCC radio frequency exposure limits.

## 1.8 Warranty

This product is covered by a Limited Warranty and Elkay will not be held responsible for damage of any kind in connection with the installation of the productor or http://www.elkay.com/warranty and click on drinking water products.

# Think Safety

**Before performing any work, read and understand the safety instructions in this manual.**

## 2.1 General

The Elkay Manufacturing Company (Elkay) cannot anticipate every possible circumstance that might involve a potential hazard during the installation or maintenance of this product. The warnings and instructions in this Installation Manual are, therefore, not all-inclusive. If a tool, installation procedure, or work method that is not specifically recommended by Elkay is used, you must be satisfied that it is safe for yourself and others. You should also make sure that the product will not be damaged by the methods you choose.

Most work-related accidents are caused by failure to observe basic safety rules or precautions. An accident can often be avoided by recognizing potentially hazardous situations before an accident occurs. As you install and maintain this product, you must be alert to potential hazards. You should also have the necessary training, skills, and tools to perform any installation or maintenance procedure.

## 2.2 Safety Alert Symbol

This is the safety alert symbol. It is used to alert you to potential personal injury hazards. Obey all safety messages that follow this symbol to avoid possible injury or death.

This manual contains WARNINGS, CAUTIONS, NOTICES, SAFETY INSTRUCTIONS, and NOTES which must be followed to prevent the possibility of improper service, damage to the equipment, personal injury, or death. The following keywords call the reader's attention to potential hazards.

Hazards are identified by the "Safety Alert Symbol" and followed by a signal word such as "WARNING" or "CAUTION".

## 2.3 Personal Safety

**⚠ DANGER**

- **Please read these instructions completely before starting the installation or performing any service. Failure to follow the instructions and safety precautions in this manual can result inserious injury or death.**
- **After installation, keep these instructions in a safe location for future reference.**
- **Electric supply must be identical in voltage, cycle, and phase to that specified on nameplate.**
- **Electrical supply must have Ground Fault Circuit Interrupter (GFCI) protection.**
- **A means for disconnecting electrical supply to the unit must be incorporated in the fixed wiring in accordance with wiring rules. This is to allow electrical disconnection of the unit from electrical supply after installation.**

**⚠ WARNING**

**These warnings indicate a potentially hazardous situation which, if not avoided, could result in serious injury or death. Follow all instructions related to the installation and/or maintenance of this product (unit).**

**For use with clean, clear potable drinking water only. Do not use with water that is microbiologically unsafe or of unknown quality without adequate disinfection before the system.**

**Installation and connection to water and electrical mains must be in compliance with local and national laws.**

**All Installation and Service work must be performed by an authorized service personnel.**

**Personal Protection**
**Be sure to use all personal protective equipment, such as sturdy safety glasses, work shoes, hearing protection, and cut resistant gloves, whenever necessary, to ensure your own safety.**

**To avoid eye injury, always wear protective glasses with side shields when using power tools. Also, make sure no one else can be injured by flying particles when using power tools.**

**Always wear ear protection, such as earmuffs or earplugs, when using power tools.**

**Wear protective cut resistant gloves during installation to protect against sharp edges from sheet metal components.**

**Power Tool Hazard**
**To prevent personal injury or possible death, always follow the electrical safety recommendations of the power tool's manufacturer.**

- **Do not use power tools in an unsafe manner.**

- Power tools should only be connected to a circuit protected by a ground-fault circuit interrupter (GFCI).
- If an extension cord is required, always use an appropriate extension cord.

**Shock and Electrocution Hazards**
Failure to follow these instructions could result in severe electrical burns, significant injuries, and even death.

Water will conduct electric current to create a short circuit, resulting in injury or death.

- Never use electric power tools around water or wet floors/surfaces.
- Keep all liquids away from electrical cords and power tools.
- If an extension cord is required, always use an appropriate extension cord.
- DO NOT create a short circuit between a source of electricity and a liquid by being in contact with both simultaneously.

**WARNING**

Contacting live electrical wiring with power tools or hand tools can cause serious injury or death.

- Make sure all related circuit breakers are turned OFF.
- Test for live circuits or wiring inside any wall where installation of the product requires cutting into a wall.

Prior to any maintenance, make sure the unit is disconnected from the power source and the circuit breaker is turned OFF.

Prior to installation, test for live circuits or wiring inside the wall before cutting or drilling into the wall. Before working near any electrical circuit or wiring, remove all power and use a circuit tester to verify the power has been disconnected. Contact with live electricity can cause serious bodily injury and in some cases death.

**CAUTION**

These cautions indicate a potentially hazardous situation which, if not avoided, may result in minor or moderate injury. Follow all instructions related to installation and/or maintenance of this product.

This appliance can be used by children aged from 8 years and above and persons with reduced physical, sensory, or mental capabilities or lack of experience and knowledge if they have been given supervision or instructions concerning use of the appliance in a safe way and understand the hazards involved. Children shall not play with the appliance. Cleaning and user maintenance shall not be made by children without supervision.

To prevent a metallic taste or increased metal content in the water due to an electrolysis process caused by electrical feedback from the grounding of electrical equipment to water supply and water waste mains, connect to these mains using non-conductive materials. The provided Filter meets this requirement.

**Tripping Hazard**
Personal injury can result from tripping over power cords, tools, or other installation items. DO NOT leave items laying around the work area.

**Cutting Hazard**
The installation of this product requires using power tools.

Keep hands away from the cutting edge of any tool used in the installation of our product.

Placing fingers in or around the cutting blades could result in serious personal injury.

**Use Proper Tools**
Always use proper tools which are in good working condition during the installation of the product.

## 2.4 Property Damage

**NOTICE**

**Inspect Before Cutting**
Make sure no electrical wiring or plumbing is present before cutting into a wall.

# 3. Installation Preparation

For correct and safe installation, please read these instructions completely.

**⚠ DANGER**

- **All Installation work must be performed by an authorized service personnel.**
- **Disconnect electrical supply serving the Installation area to reduce risk of electrocution.**
- **Unit not suitable for installations where water jets could be used.**

**⚠ WARNING**

- **Shut off water supply serving the Installation area to reduce risk of water damage.**
- **Ensure proper ventilation by maintaining clearance from cabinet louvers to wall on each side of Cooler as specified in Rough-In.**
- **Never wire compressor directly to electrical supply.**
- **Thoroughly flush all water lines and fittings of all foreign matter before connecting to Cooler.**
- **Warranty is void if Installation is not made in accordance with current Manufacturing instructions.**

**⚠ CAUTION**

- **Hose-sets are not to be used for connecting to water mains.**
- **If inlet pressure is above 105 psig (0.72 MPa), a pressure regulator must be installed in water supply line. Any damage caused by reason of connecting this product to water supply line pressure outside it's rated pressure, is not covered by warranty.**
- **Tools/Items required but not provided.**
  - Water Shut-off Valve with 3/8" (9.5mm) compression outlet.
  - Waste Trap (non-metallic)
  - Safety Glasses
  - Protective Gloves
  - Hex drives
  - Fasteners for wall type

**NOTICE** **The installation of this product requires electrical and plumbing connections that use specific skills and knowledge. If you are unsure or not qualified to make these connections, consult a qualified plumber, electrician, or installer for this installation. Professional installation is recommended.**

1. This water dispenser is designed for indoor use only and should not be installed outdoors or in a humid environment. This water dispenser should not be installed on exterior walls.

2. Location planning for remote filter and optional chiller is crucial based on chosen configuration. The location of the water dispenser must be within 15 feet of the remote water filter and chiller (chiller optional). Both must be in an accessible location. For chiller installation, ensure adequate ventilation space as outlined in chiller manual. It also must be located after the filter for proper filtration and cooling (see figure below).

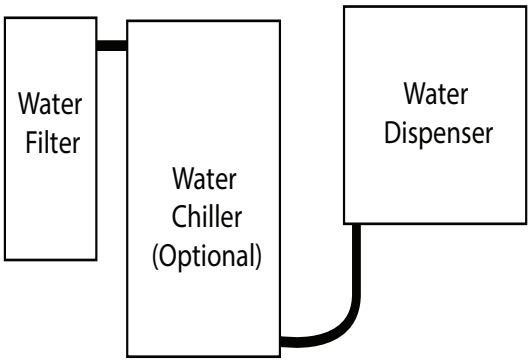


**NOTICE** **A water supply pressure below 40 psi will result in decreased water flow through the unit and damage to the product. A pressure above 105 psi will also cause damage to the product.**

3. Make sure the water supply pressure to the product is between 40 and 105 psi. The water dispenser with filter requires 40 psi minimum water pressure. The optimum water pressure is 60 psi. The noise level is lower than 70 dB.

4. Use care when opening and removing the packaging to prevent damage to the product.

   a. Inspect the product for any shipping damage and report it immediately to the location of purchase. Installation of a damaged product will void the warranty.

   b. Confirm that all parts have been included for the proper installation of this product. Contact the location of purchase if damaged parts are found.

**NOTICE** **Make sure no electrical wiring, potable water inlet pipes, or drain water outlet pipes will be damaged during installation of the product.**

5. Shut off the water supply source and disconnect power to the electrical circuit being used to operate the product before starting the installation.

# 4. Installation

## 4.1 Tools Required

| Tool | Used For |
|---|---|
| Tape Measure | Locating mounting opening |
| Wall Cutting Toll | Remove section of wall to insert unit |
| Level | Proper mounting into the wall cavity |
| Phillips Screw Driver | Remove electrical box cover |
| Various Electrician's Hand Tools | Connecting power source to the unit's wiring |
| Various Plumber's Hand Tools | Connecting unit's plumbing to the household water source and waste drain |
| 3/32 Allen Wrench | Remove the front covers |

## 4.2 Installer Supplied Parts Required

| Description | Qty. |
|---|---|
| #8 Flathead Screws 1-1/4" long | 8 |
| **Electrical** | |
| 12/2 with ground electrical wire (depending on local building codes the installation could require rigid conduit, armored cable, or plastic sheath NM-B cable) | — |
| Electrical wire nuts (appropriate size) | — |
| GFCI circuit (connected into an electrical circuit) | 1 |
| **Water** | |
| 3/8" flexible water tubing (copper or plastic)(insulated) | — |
| Quarter-turn shut off valve at the location of the water source | 1 |
| 1/4 inch copper or plastic tubing if a remote filter is installed (insulated) | 15 feet or less |
| **Optional Catch Basin Drain** | |
| 1-1/4" P-trap and related parts | — |
| Plumbers Putty | — |
| Additional 3/4 inch drain hose if the installation requires a longer drain hose than the supplied 13 inch long hose | |
| All-pole Switch (A disconnection incorporated in the fixed wiring shall be provided, including an all-pole switch with appropriate rating voltage and current connecting with supply mains and the product) | 1 |

## 4.3 Critical Depth Check and Cutting Size Mounting Dimensions

1. Make sure the wall cavity is deep enough to house the water dispenser (dimension A).
2. If the optional filter box unit will be installed, make sure there is adequate space to route electrical wiring between the wall and the filter box which is approximately 1-5/8" for standard 2 x 4 wall construction.

### 4.3.1 Water Dispenser with Filter Box

***Note:*** *For water dispenser without filter box, see section 4.3.2.*
*A filter box should not be installed in conjunction with a chiller. If planning to install with a chiller, see section 4.3.2.*

Dimension A is a minimum depth requirement.

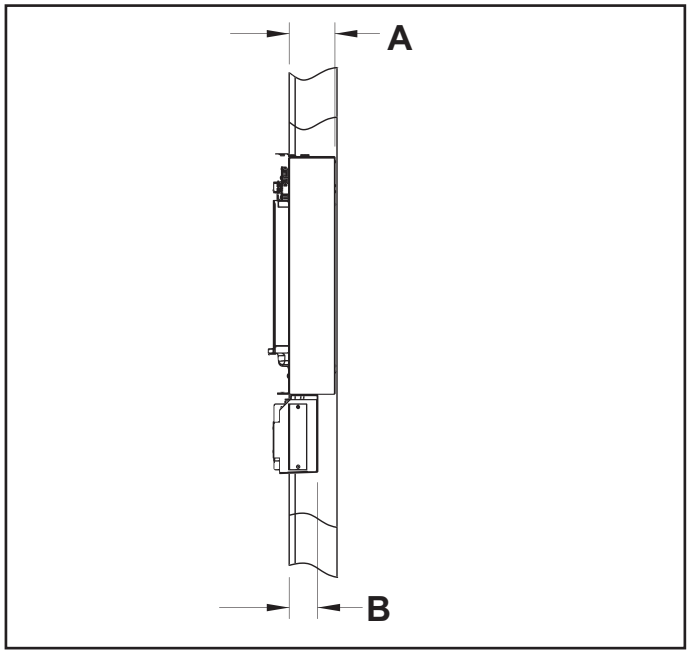


**Water Dispenser**

A) 3-7/8" (97 mm) deep.

**Filter Unit**

B) 2-3/8" (61 mm) deep.

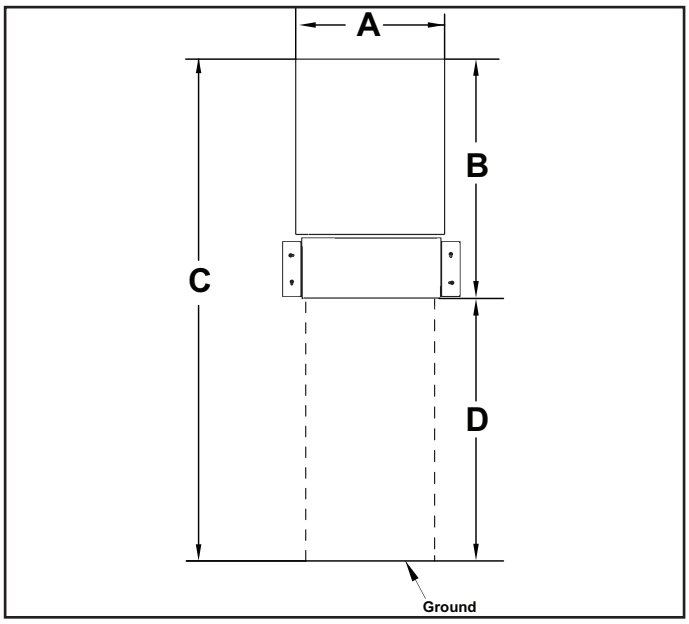


**Recommended Dimensions**

A - Unit width opening should be 14-1/2" (368 mm) wide
B - Unit height opening with filter box should be 26-1/2" (673 mm) high
C - Suggested unit height from the floor is 56-3/4" (1441 mm)
D - Optional cut from bottom of water dispenser to floor for plumbing and electrical access

### 4.3.2 Water Dispenser without Filter Box

Dimension A is a minimum requirement.

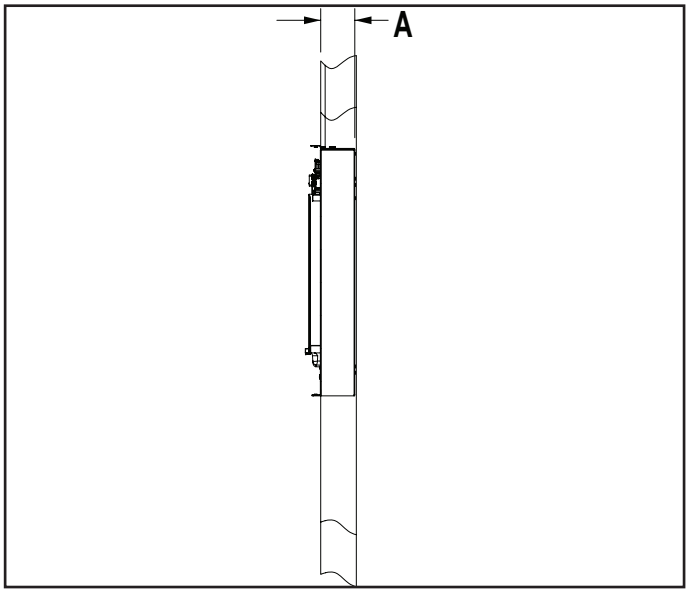


**Water Dispenser**
A) 3-7/8" (97 mm) deep

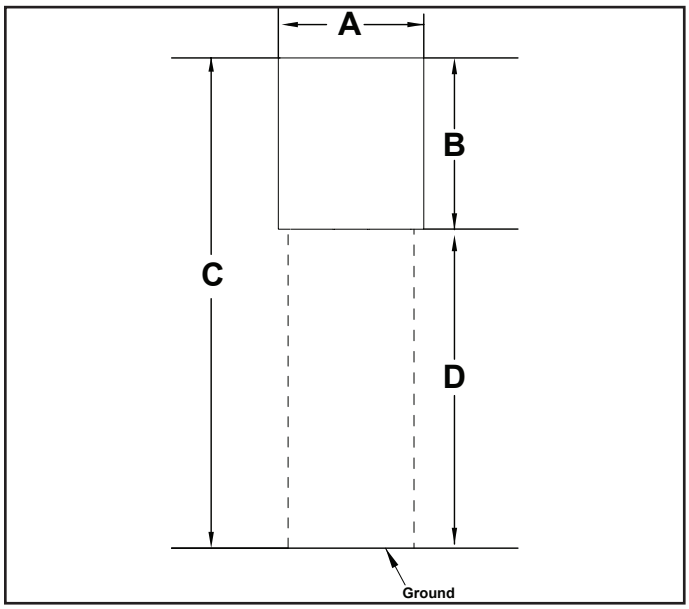


**Recommended Dimensions**

A - Unit width opening should be 14-1/2" (368 mm) wide
B - Unit height opening should be 19-7/8" (505 mm) high
C - Suggested unit height from the floor is 56-3/4" (1441 mm)
D - Optional cut from bottom of water dispenser to floor for plumbing and electrical access

### 4.3.3 Plumbing and Electrical Key

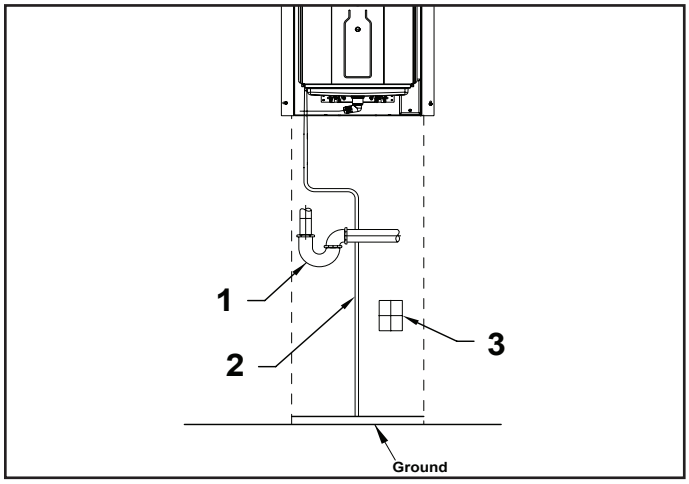


**Plumbing and Electrical Key**
1) P-trap 2) 3/8" flexible water tubing (3) Electrical box

***Note:*** *Always consult local plumbing codes prior to installation.*

***Note Item 1:*** *If the p-trap is sealed within the wall, under the water dispenser, all the plumbing joints must be glued. The glue must be appropriate for the PVC pipe utilized. If the p-trap uses threaded components, they must be easily accessible.*

***Note Item 2:*** *According to most electrical codes, the electrical box cannot be sealed inside a wall cavity with no access. If the electrical connection is placed under the unit, a user supplied removable wall cover will be required to access the junction box.*

## 4.4 Water Dispenser Installation

There are various filter, chiller and drain installation configurations available. Once the water dispenser is installed, proceed to the following sections to configure the filter, optional chiller and drain line installation using the appropriate configuration(s):

1. Water dispenser with attached filter box and no chiller.
2. Water dispenser with a remote filter with no chiller.
   **Note**: *When the filter is located in a remote location, mount the filter vertically on a wall or other supporting structure before the water filler*.
3. Water dispenser with remote filter and chiller.
   **Note**: *When the filter is located in a remote location, mount the filter vertically on a wall or other supporting structure before the water chiller*.
4. Water dispenser with optional waste drain.

Regardless of configuration type, follow below (all configurations) instructions to first install the water dispenser:

### 4.4.1 Installing Water Dispenser

1. Cut the opening into the wall using the recommended mounting dimensions as a guide.
2. Place the unit into the wall cavity and slide it up against the drywall at the top of the opening. The unit is designed with 1/4 inch overlap to conceal any irregularities at the top of the wall opening.

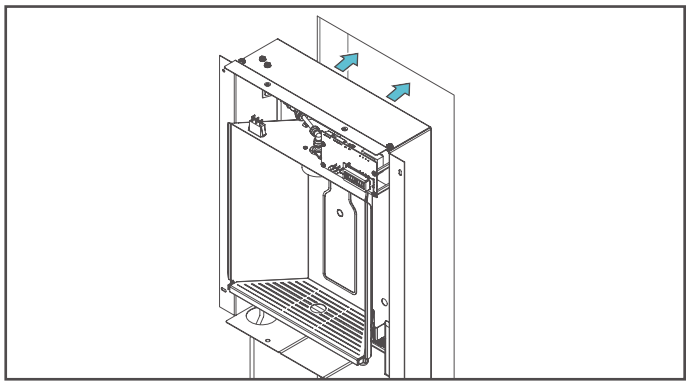

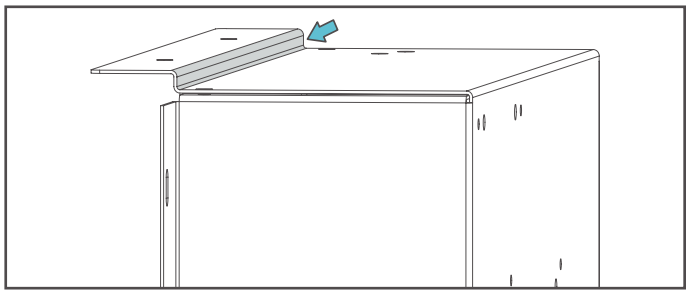

***Note:*** *A 1/4 inch offset helps conceal any irregularities at the top of the wall opening.*

3. Using a bubble level, straighten the water dispenser and attach it to the wall studs using four #8 flathead screws.

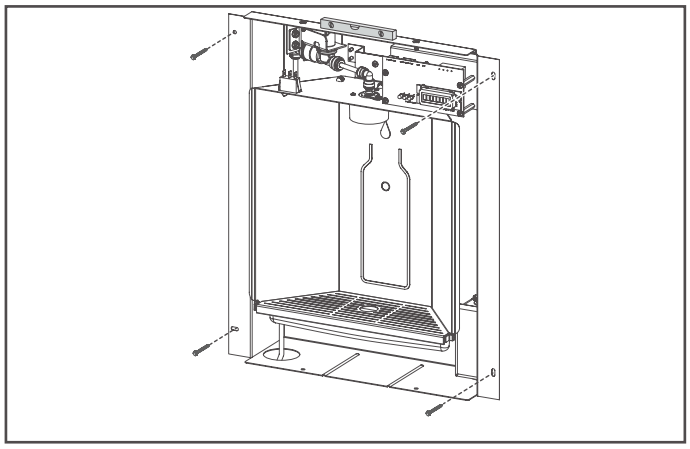

4. Locate the electrical gang box, at the lower right-hand corner of the water dispenser and remove the cover.

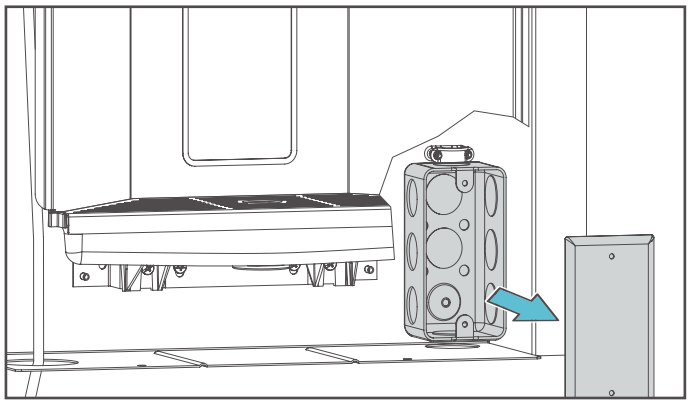

**⚠CAUTION** **Follow all safety practices and industry regulations and standards when connecting any electrical device. A minimum 15 AMP GFCI Circuit Breaker is required for safe installation.**

5. Connect a 115 VAC, 60Hz power supply to the water dispenser. Route the wiring through the wall into the bottom of the electrical gang box.
   a. Route the appropriate electrical wiring through a wiring clamp into the gang box.

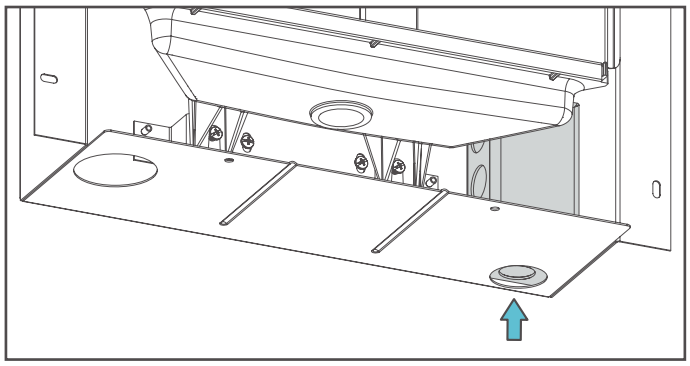

**NOTICE** **Do not use a cord with a three prong plug to power this unit.**

b. Tighten the wiring clamp to prevent the wire from being pulled out of the gang box.

c. Connect black wire to supplied voltage line (black) wire and the white or brown wire to neutral.

d. Use installer provided wire nuts to insulate the connections.

e. If required by code a green grounding screw can be used to connect a grounding wire inside the gang box.

f. Reinstall the gang box cover.

### 4.4.2 Installation of Filter Box

***Note:*** *If installing a remote filter, proceed to section 4.4.4.*

1. For installation of filter box below the water dispenser, first replace the front cover of the water dispenser to help locate and align the filter box.

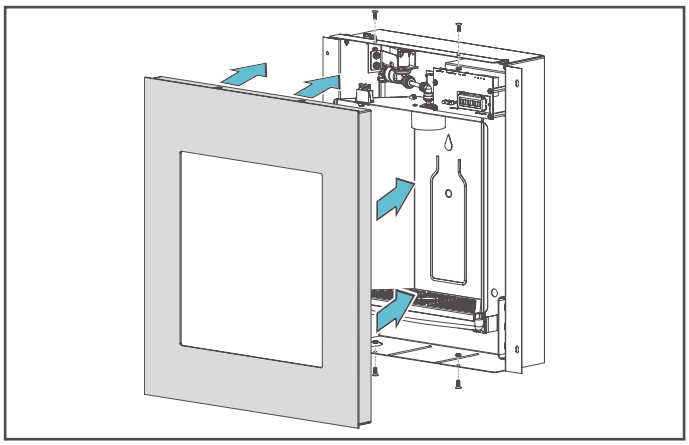

**NOTICE** **It is recommended to attach the front cover with the top two mounting screws to prevent it from falling away from the water dispenser while the filter unit is being installed.**

2. Place the filter box into the wall opening and slide it up against the bottom of the water dispenser. Make sure the filter unit is aligned with the water dispenser.

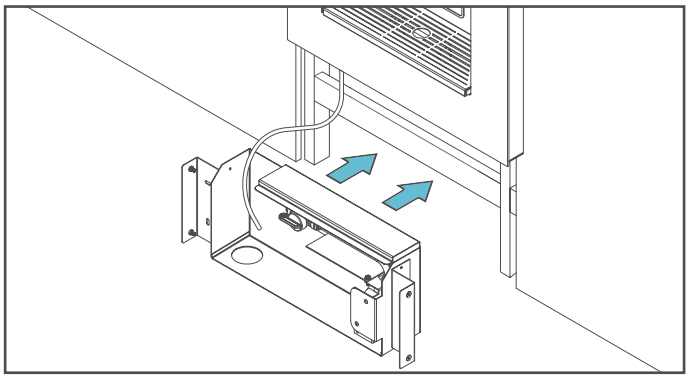

3. Using four #8 flathead screws, start the screws to hold the unit in place.
   ***Note:*** *Do not completely tighten the screws until the filter unit cover is installed and the fit between the water dispenser cover and the filter cover is checked.*

4. Replace the filter unit cover and check the gap between the two covers. Adjust the filter box to create an even gap all the way across the units. Tighten all screws.

***Note:*** *Some side-to-side and up-and-down movement of the housing is capable to accurately align the filter unit with the water dispenser.*

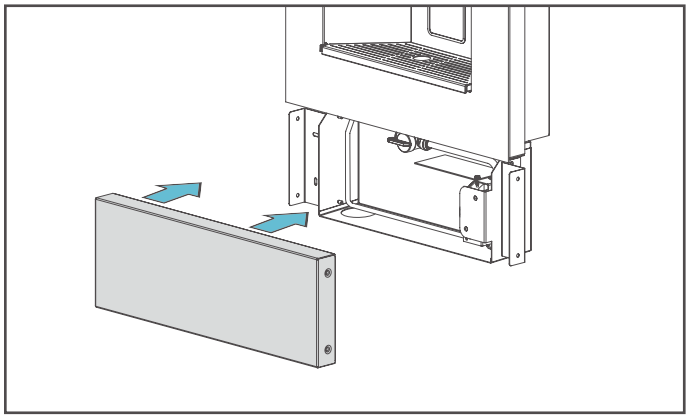

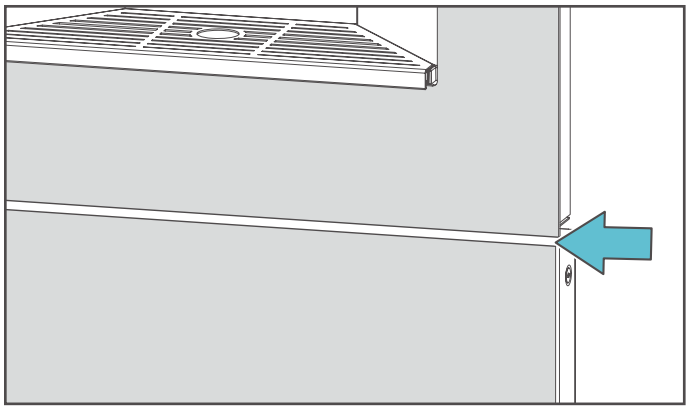

*Create an even gap across the entire unit.*

5. After aligning the two sections, remove the front cover from the filter unit by removing the four flat head screws from the right and left side of the cover using a 3/32 Allen wrench.

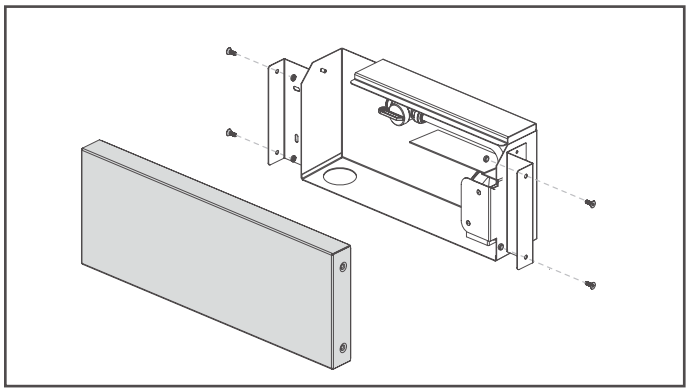

### 4.4.3 Connecting the Water Lines

1. Route a 1/4" water line from the water dispenser into the filter housing outlet (located on the underside of the filter head).

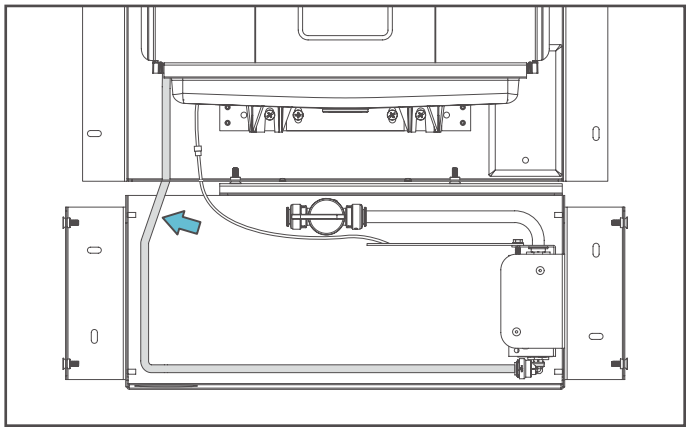

**NOTICE** **Do not disconnect the 1/4" tubing from the water valve at the top of the water dispenser. This connection has been factory tested to be leak-free and could result in water leaking into the unit if this connection is changed.**

2. Connect the NFC wire to the wire harness.

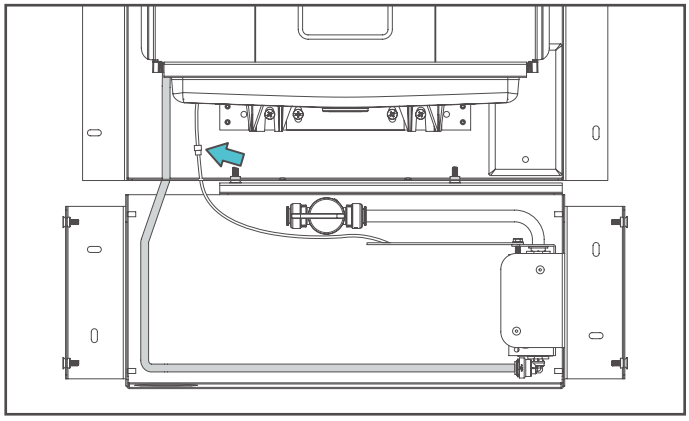

3. Connect the 1/4" tube to the fitting below the filter, as shown.

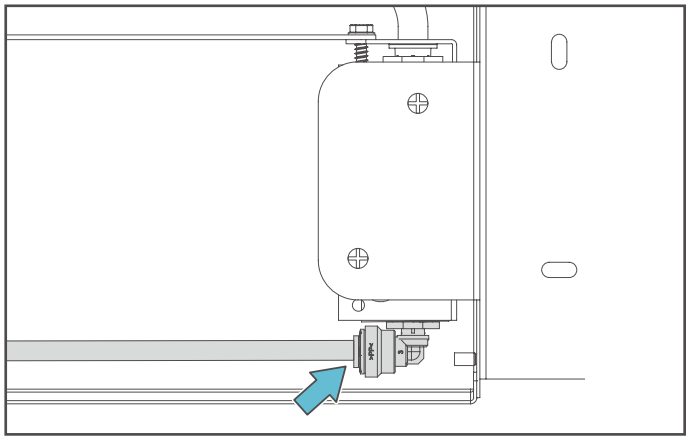

4. Connect an installer supplied 3/8" water supply tube to the quarter-turn shutoff valve, as shown. The type of tubing, copper or plastic, should meet all local regulations and building codes.

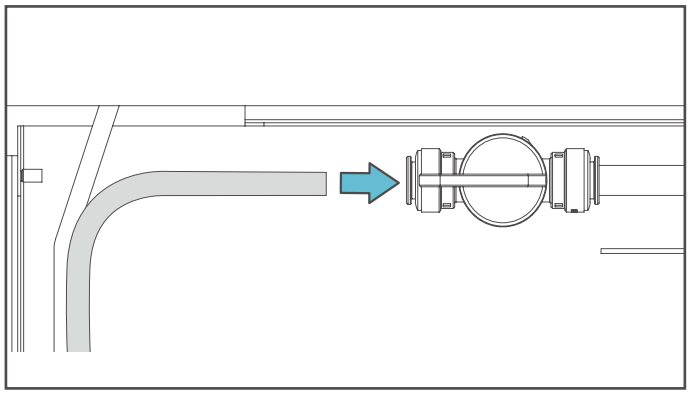

***Note:*** *Elkay also recommends installing a shutoff valve at the source of the water supply for the water dispenser.*

5. Write the current date on the filter in the space provided. Attach the filter cartridge by firmly inserting it onto the filter head and twisting it clockwise until it is completely seated. The label must be facing outward to be correctly installed.

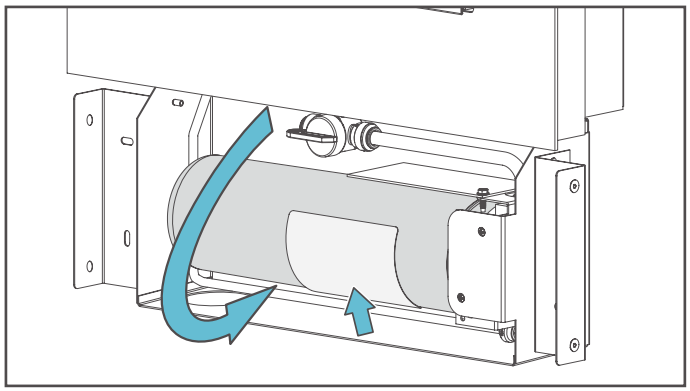

***Note:*** *When a filter requires replacement, a red indicator light illuminates on the bottle filler. If the new filter is installed and red indicator light is still ON the filter has been installed incorrectly. The filter can only be installed in one direction (label facing outward). If the red indicator light is ON, the filter is installed backwards.*

***Note:*** *Depending on chosen configuration installation, either proceed to section 4.6 for optional waste drain and catch basin installation or section 5 for startup.*

### 4.4.4 Installing Remote Filter

***Note:*** *The filter unit is installed remotely, up to 15 feet away from the water dispenser. The filter can also be installed in conjunction with a remote chiller. If installing a chiller, first review section 4.5 to ensure proper preparation is taken.*

1. Once the water filter is installed, remove filter head from the filter box as shown below.

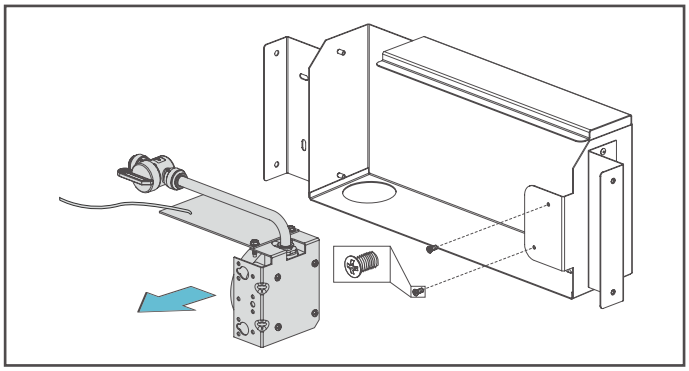

2. Securely mount the filter head in the desired remote location within 15ft of the water dispenser. One recommendation is to install the filter head by screwing it into a stud on the back side of a wall.

   a. Remove the short 3/8" copper inlet water tube.

   b. Remove the NFC card.

   c. Remove the four screws that hold the bracket to the filter head.

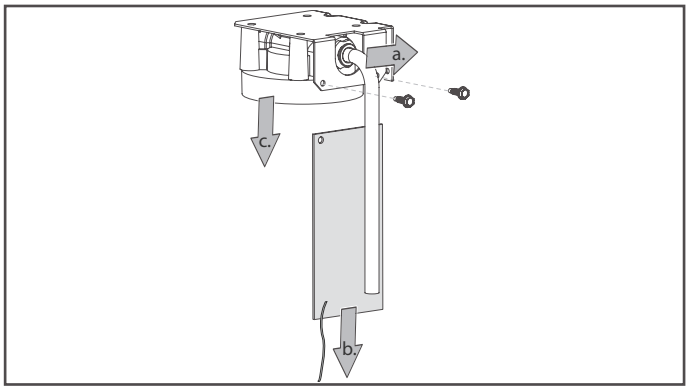


   d. Screw the bracket to a wall stud, then reassemble the filter head, NFC card, and inlet water tube.

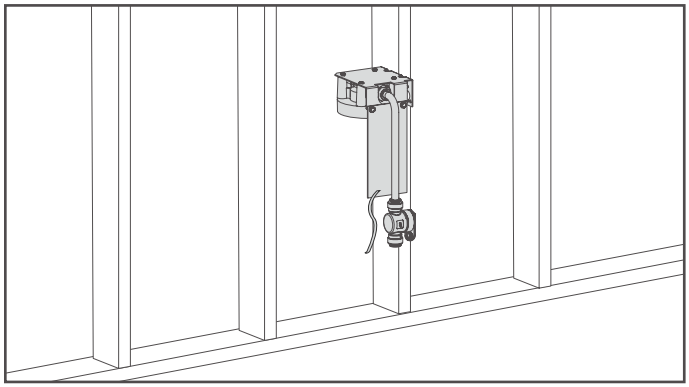

***Note:*** *If desired, you can install the filter into the filter head now.*

3. Connect a 3/8" water supply line, copper or plastic, to the quarter-turn shutoff valve at the remote location.

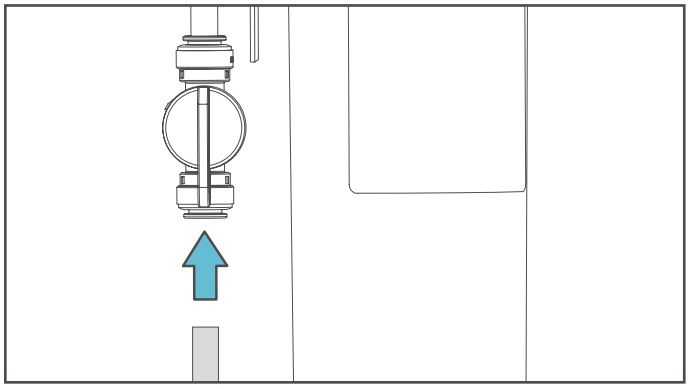

4. Connect a 1/4 inch insulated water line, copper or plastic, to the outlet connector of the filter.

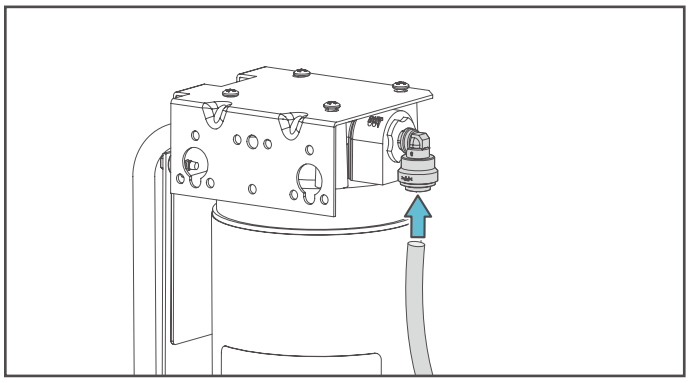

5. Connect the 1/4" insulated water line to either a remote chiller (if used) or the 1/4" water line on the bottle filler. Use a union connection fitting to connect the water line to the bottle filler. The type of 1/4" tubing, copper or plastic, should meet all local regulations and building codes. This line should be insulated to prevent condensation.

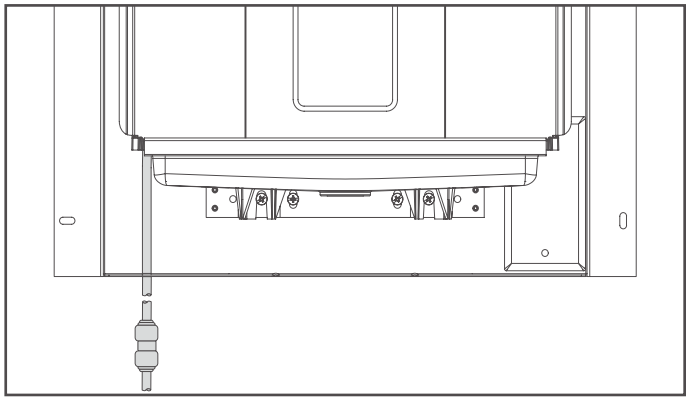

**NOTICE** **Do not disconnect the 1/4" tubing from the water valve at the top of the water dispenser. This connection has been factory tested to be leak-free and could result in water leaking into the unit if this connection is changed.**

***Note:*** *Do not place the remote filter more than 15 feet from the water dispenser.*

6. Connect the extension cable (18 foot NFC wire) from the NFC card circuit board to the wire harness on the water dispenser circuit board.

7. Mark the current date on the water filter label.

8. Place the filter into filter head with the label facing outward.

9. Firmly press the filter into the filter head and turn it clockwise.

***Note:*** *When a filter requires replacement, a red indicator light illuminates on the bottle filler. If the new filter is installed and red indicator light is still ON the filter has been installed incorrectly. The filter can only be installed in one direction (label facing outward). If the red indicator light is ON, the filter is installed backwards.*

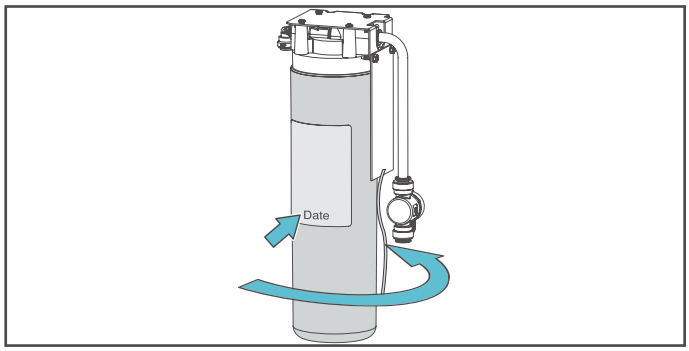


## 4.5 Installing Remote Water Chiller (optional)

A remote water chiller can be installed in connection with the water dispenser to supply chilled water. The chiller must be installed within 15 feet of the water dispenser, in an accessible location. Install the chiller with adequate ventilation space, as outlined in the water chiller manual.

The standard installation of the in-wall water dispenser supplies filtered water at the ambient temperature of the water supply that comes into the unit. This temperature can vary greatly depending on the location of the incoming water line.

Follow the installation instructions that come with the water chiller. The filter unit must also be installed prior to the chiller, and the water line from the chiller to the water dispenser cannot be more than 15 feet long. When the filter is located in a remote location, mount the filter vertically on a wall or other supporting structure near the chiller.

**NOTICE** **The filter must be installed before the chiller. The filter will have water stored within it, so if the filter is after the chiller, the unit will dispense ambient water for 1-2 cycles before receiving chilled water.**

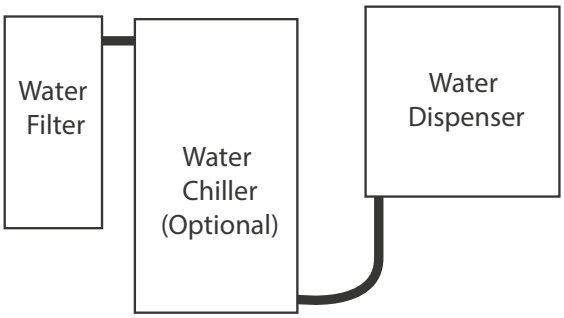


***Note:*** *The remote chiller can take from 24 to 48 hours to provide completely chilled water. Water lines must be insulated to prevent condensation.*

## 4.6 Connecting Catch Basin Waste Drain (optional)

Installing the drain is highly recommended to prevent basin overflow.

The water dispenser does not require a drain connection to the wastewater plumbing. The water dispenser has a built-in catch basin that will hold the typical overflow that can occur when using the product.

Some local building codes, however, may require a wastewater drain to prevent the potential overflow of water. The following steps cover the installation of the drain.

1. Remove the two screws attaching the drain basin to the water dispenser. Remove the drain basin.

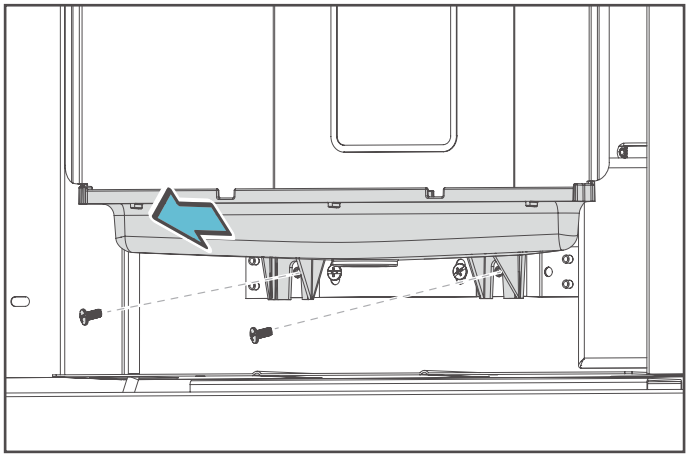

2. Place the drain basin on a flat, hard surface, such as a piece of sacrificial wood. Carefully drill a hole in the basin using a 1" hole saw using the centering-dimple as a guide to center the hole saw.

***Note:*** *Do not use a 1-1/8" hole saw as this will make the opening too large.*

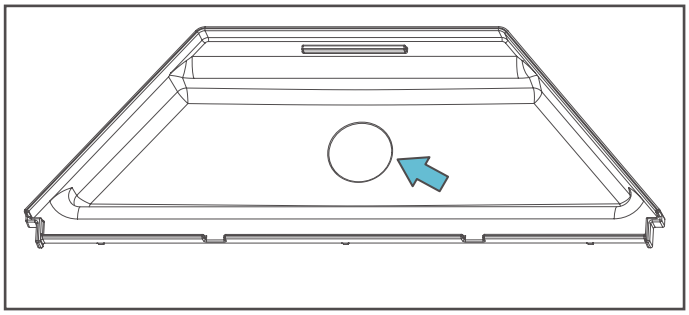

3. Trial fit the strainer. If the strainer does not fit, carefully open the size of the hole. If it fits well, place a small amount of plumbers putty around the lip of the strainer flange and insert it into the hole.

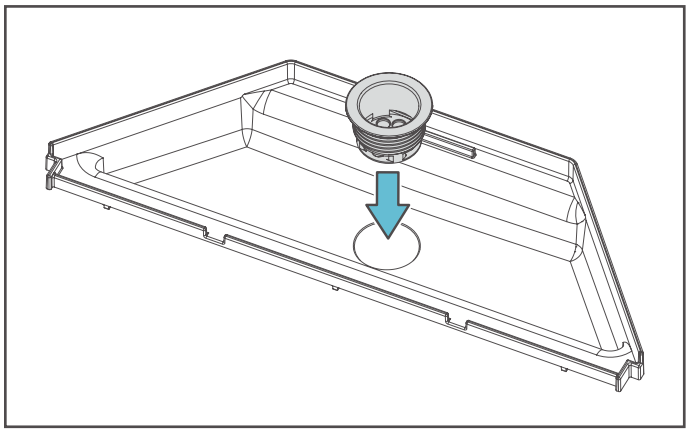

4. Install the O-ring over the strainer threads.

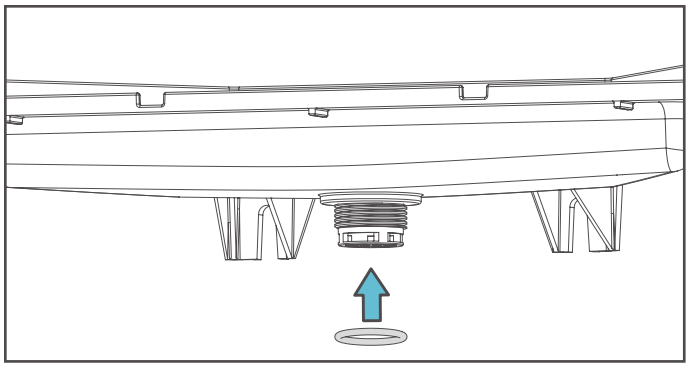

5. Thread the strainer into the drain adapter. Needle-nose pliers can be used to hold the drain adapter from the top while tightening. Ensure that the connection creates a watertight seal. The drain adapter must be facing to the left.

***Note:*** *Twisting the strainer instead of the drain adapter can compromise the seal created by the plumber's putty.*

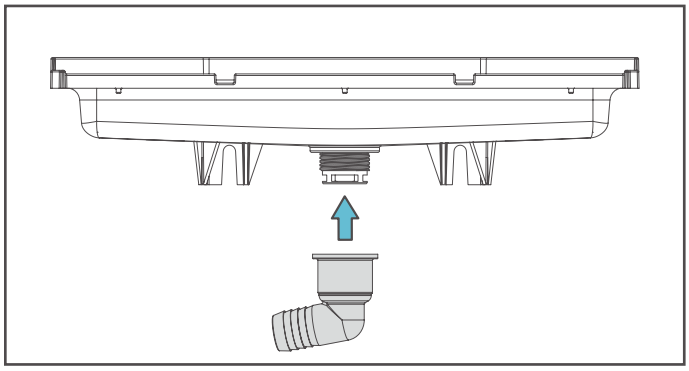

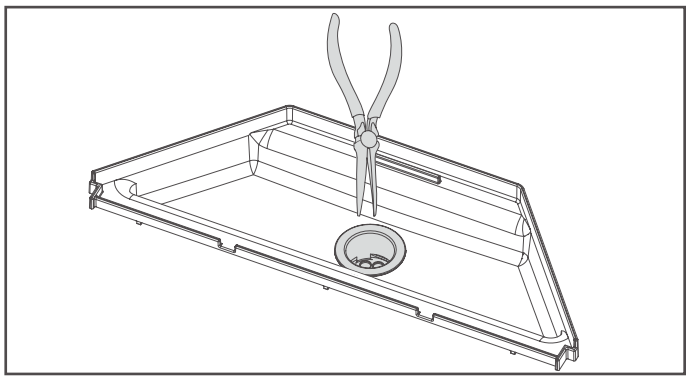

**NOTICE** **For the following steps, it is recommended to use a heat gun when manipulating the flexible drain hose. It is beneficial to conservatively soften the material before trying to make connections**.

6. Attach one end of the 3/4 inch flexible drain hose to the 3/4 inch barbed drain adapter connection using the supplied hose clamp. The supplied flexible drain is 13 inches long. If a longer drain hose is required, it must be installer-supplied.

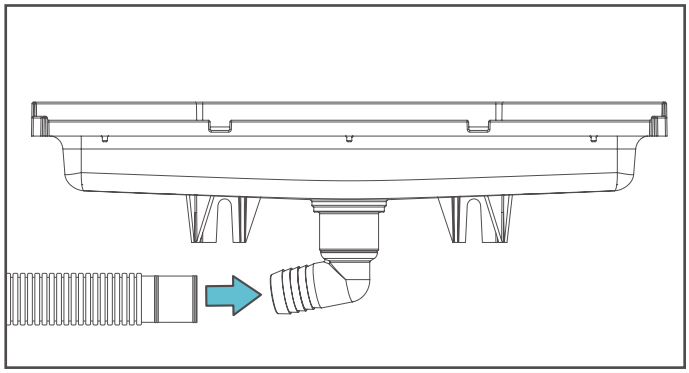

7. Place the drain basin back into the water dispenser and reinstall the two screws.

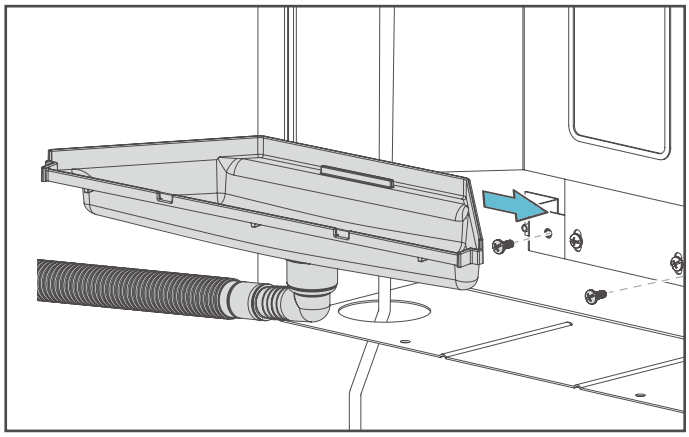

8. Route the drain hose through the filter box (if installed) and attach the other end to the p-trap drain adapter using a hose clamp. The drain adapter is designed to be glued into a 1-1/4 inch PVC pipe.

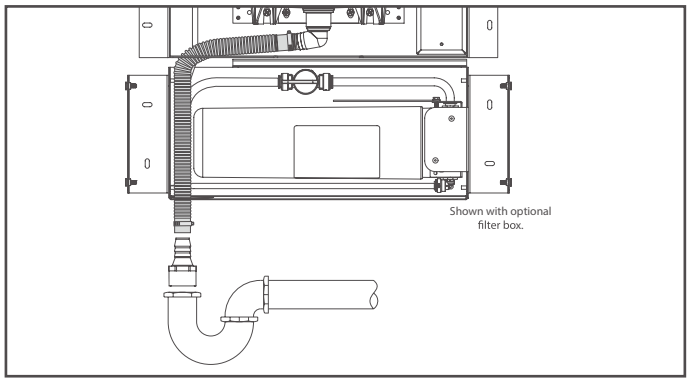


9. First, write the current date on the filter in the space provided. Attach the filter cartridge to the filter head by inserting firmly into the filter head, turning clockwise to install so the label is facing downward.

10. Connect the drain adapter into the waste drain pipe.

    If the p-trap is located inside a sealed walled, it must have permanently-glued joints. If the p-trap is in an accessible location, a standard non-glued p-trap is acceptable.
    ***Note:*** *Whichever installation method is used: it must meet local standards and building codes.*

11. Install the metal grate cover. Do not install the drip tray since the unit is plumbed into the local waste line.

# 5. Startup

1. Open the shutoff valves in the filter box and water supply. Check for any water leaks.

2. Place the ON/OFF switch in the upper left-hand corner of the water dispenser in the OFF position.

3. Turn the power to the unit ON (typically a circuit breaker).

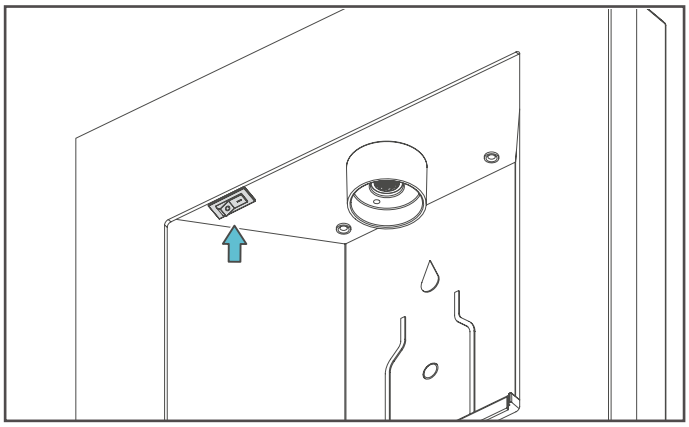

4. Remove the scratch-resistant protective layer that is covering the glass face, the filter cover (if used), and the back wall of the water dispenser.

***Note:*** *Not removing the back wall covering layer will activate the IR sensor when the unit is turned ON.*

5. Move the water dispenser's power switch to the ON position and make sure the LED lights are lit on the circuit board.

6. Place a container under the water dispenser spout to activate the fill sensor and dispense at least one gallon of water to bleed off any trapped air from the supply lines and filter as well as flush any fine carbon particles from the filter.

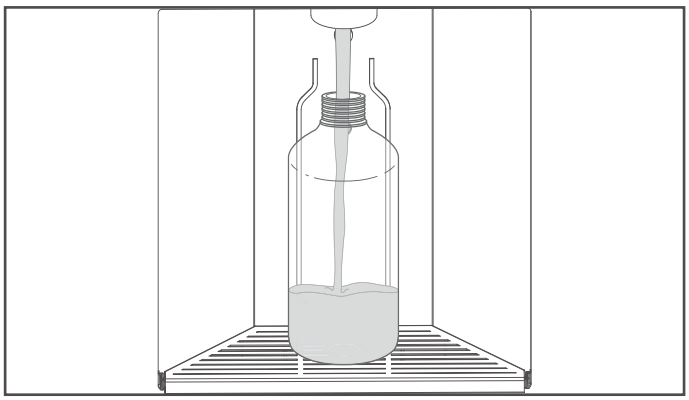

***Note:*** *The water dispenser is set to automatically shut off after 16 seconds or 13 ounces of water has been dispensed to prevent overflow and potential flooding so multiple activations will be required to get the required one gallon of water flow through the unit.*

7. If there are no leaks and the unit is functioning correctly, install the water dispenser glass cover and then install the filter box (if applicable) cover using the flathead screws and a 3/32 inch Allen wrench.

8. Upon initial startup, the PLASTIC BOTTLES SAVED indicator panel should show several bottles have been saved due to the water used to initially start up the unit.

9. The left-most FILTER LIFE indicator light should also be lit. This light shows the filter is functioning correctly and has used less than 65 percent of its capacity.

   When the middle blue light illuminates, the filter has reached 66 percent of its life and will need to be changed soon. When this indicator light comes on, a replacement filter should be ordered.

   The right-most red light will illuminate in red and indicates that the filter should be changed.

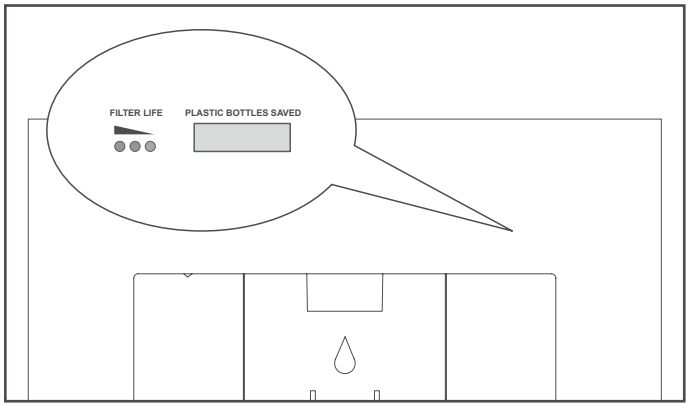


10. Once the installation is complete, the water has been turned on, and any trapped air has been bled from the system re-check for any water leaks.

11. Enjoy fresh filtered water with your new Elkay ezH2O Liv PRO water dispenser.

## Replacement Parts List

| ITEM NO. | PART NO. | DESCRIPTION |
|---|---|---|
| NS | 1000004698 | Fitting - Hose to Trap |
| 1 | 1000005397 | KIT - Solenoid |
| 2 | 1000005396 | LED Bezel, KIT - Harness |
| 3 | 1000004711 | Wire - 18' NFC, Remote Filter Connection |
| 4 | 1000005939 | Alcove, KIT - Alcove |
| 5 | 1000005392 | KIT - Drain Basin |
| 6 | 1000005846 | Switch - Rocker LIV |
| 7 | 30004C | Box - Conduit |
| 8 | 1000005393 | Lens, KIT - IR |
| 9 | 56331C | Connector |
| 10 | 70793C | Elbow 1/4 O.D. X 90 |
| NS | 71300C | PFAS (PFOA/PFOS), Replacement Filter |
| 11 | 1000005454 | KIT - Filter Head and Bracket Assembly |
| NS | 1000005347 | KIT - Replacement Glass - Black |
| NS | 1000005348 | KIT - Replacement Glass - White |
| 12 | 1000001812 | KIT - Bottle Filler Drain |
| 13 | 1000005394 | KIT - Control Board |
| 14 | 1000005395 | KIT - NFC Reader |
| NS | EFBLIVSC | KIT - Filter Box |

NS = NOT SHOWN

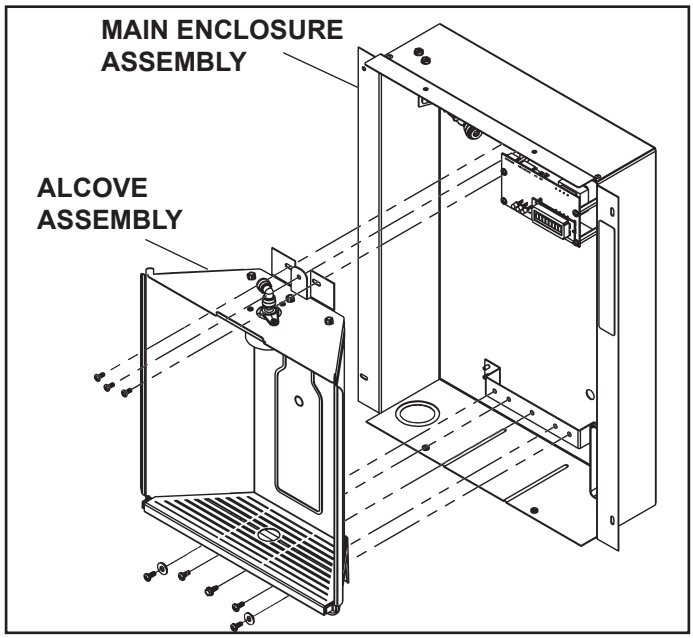


**Fig. 1**

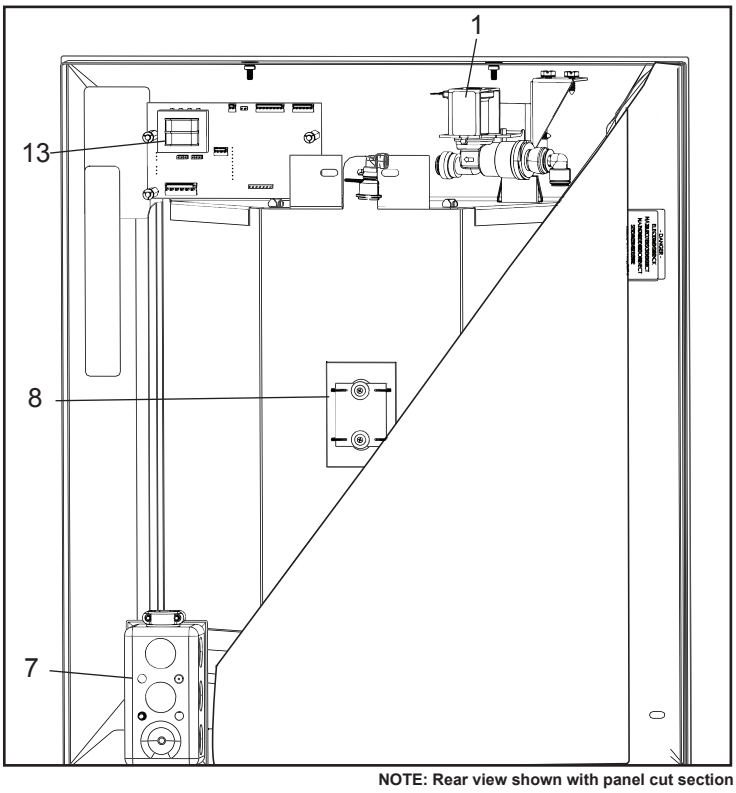


**NOTE: Rear view shown with panel cut section**

**Rear View of Water Dispenser**

**Fig. 2**

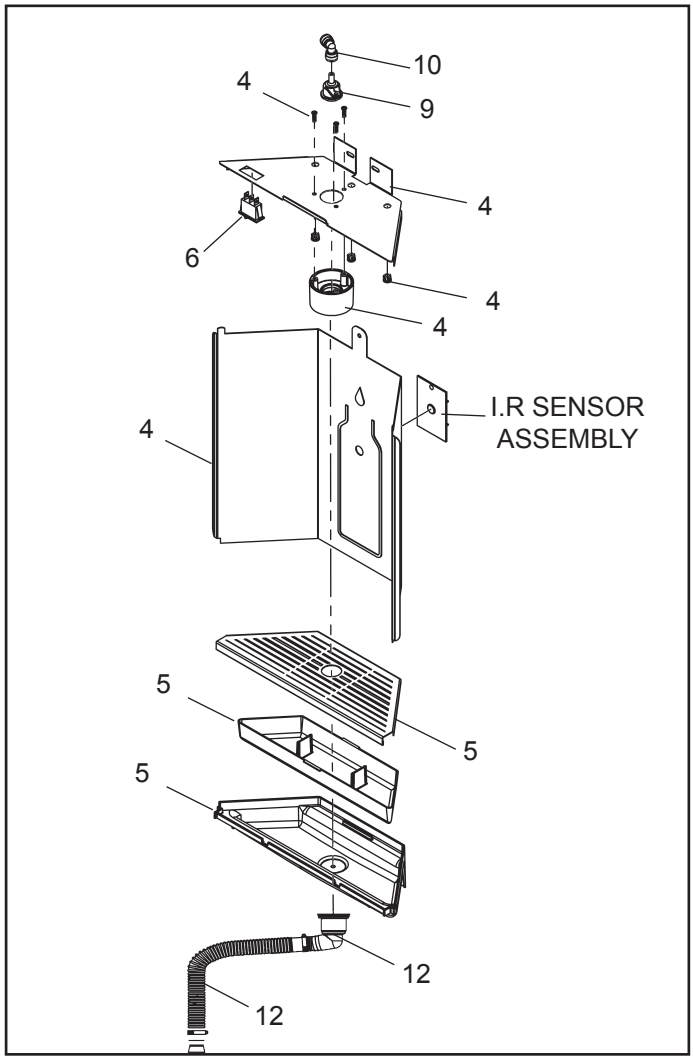


**Alcove Assembly**

**Fig. 3**

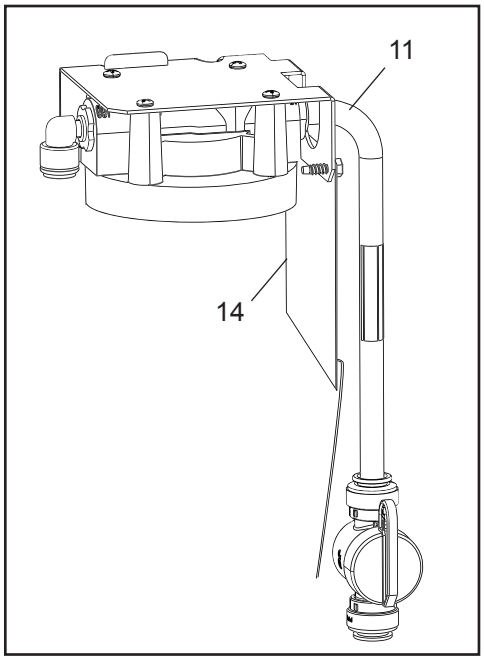


**Filter Head Assembly**

**Fig. 4**

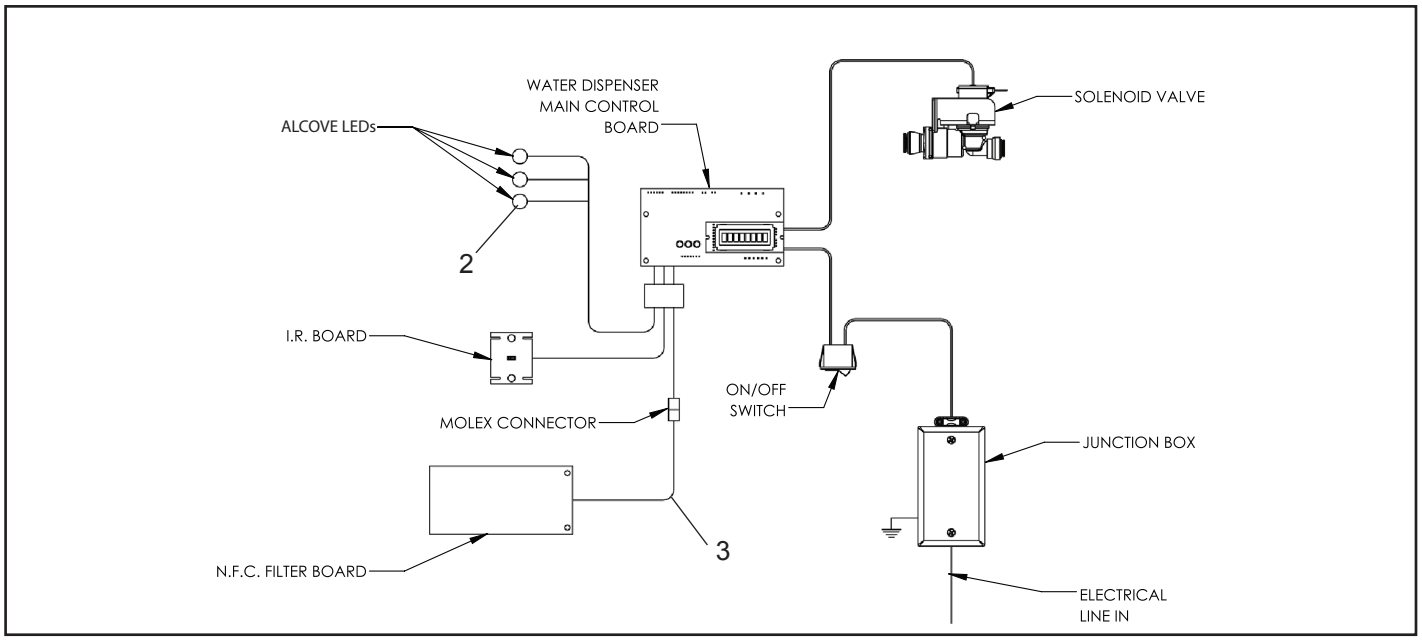


**Electrical Diagram**

**Fig. 5**

# 6. Troubleshooting

| Description | Possible Cause | Remedy |
|---|---|---|
| Water is not getting cold. | Standard water dispenser (non-chilled) | Standard unit only supplies ambient temperature water. |
| | Water chiller is not operating properly. | Refer to water chiller manual. |
| Water runs continuously from water dispenser. | Sensor is defective or dirty. | Clean or replace sensor. |
| | Solenoid or solenoid diaphragm is defective. | Replace solenoid water valve.<br>*Note: To verify faulty solenoid, disconnect the power while water is running. If water flow does not stop immediately then replace the solenoid.* |
| Low water flow. | Supply water pressure is less than required. | Water pressure must be between 40 and 105 psi. |
| | Filter is plugged. | Replace filter. |
| | Solenoid water valve not opening fully. | Replace solenoid water valve. |
| No water flow. | No electrical power. | Restore power to the unit. |
| | Water shut-off valve(s) closed. | Open all shut-off valves (one is located inside the filter box if installed and another may be at the water source). |
| | Bottle sensor is not operating properly. | Sensor is malfunctioning and must be replaced. |
| | Blocked or damaged water line. | Locate affected line and remove blockage or damage. |
| Blinking red light. | No filter. | Replace filter. |
| | Filter incorrectly installed. | Check filter is completely installed. |
| Blinking red and blue light. | Filter wire disconnected. | Check filter cable connections. |

# 7. Frequently Asked Questions (FAQ)

For FAQ questions refer to the Elkay website elkay.com/ezh2o-liv.

You can find installation and filter replacement videos on Youtube under ezH2O Liv installation and filter replacement.

1000005449

**Patent zurnelkay.com/patents**

FOR PARTS, CONTACT YOUR LOCAL DISTRIBUTOR OR CALL 1.800.834.4816
REPAIR SERVICE INFORMATION TOLL FREE NUMBER 1.800.260.6640

**ELKAY MANUFACTURING CO. • 1333 BUTTERFIELD ROAD SUITE 200 • DOWNERS GROVE • IL 60515 • USA 630.574.8484 • www.elkay.com**