ELKAY® Installation Manual

Liv Residential Built-in Filtered Non-Refrigerated Water Dispenser with Filter Box

LBWD00BKC

LBWD00WHC

Contents

1. General Information 2
- 1.1 Installation Manual 2
- 1.2 Models Covered in Manual 2
- 1.3 Serial Number Location 3
- 1.4 Contact Information. 3
- 1.5 Disclaimer 3
- 1.6 Notice of Changes 3
- 1.7 Radio Frequency Compliance. 3
- 1.8 Warranty 3
- 1.9 Definitions 3

2. Safety 4
- 2.1 General 4
- 2.2 Safety Alert Symbol. 4
- 2.3 Personal Safety. 4
- 2.4 Property Damage 5

3. Installation Preparation - Read Before Beginning Installation 6

4. Installation 7
- 4.1 Tools Required 7
- 4.2 Parts Required not Included 7
- 4.3 Critical Depth Check 7
- 4.4 Cutting Size and Mounting Dimensions 8
- 4.5 Plumbing and Electrical Key 8
- 4.6 Water Dispenser Installation 8
  - 4.6.1 Installing Water Dispenser 8
  - 4.6.2 Installing the Filter Box. 9
  - 4.6.3 Connecting the Water Lines. 10
- 4.7 Connecting Catch Basin Drain (Optional). . . 11

5. Startup 13

6. Troubleshooting. 16

7. Frequently Asked Questions (FAQ) 16

1. General Information

This hands-free water dispenser serves healthier, filtered water in a sustainable way with stylish in-wall installation. It is designed for residential purpose.

1.1 Installation Manual

Read all instructions carefully BEFORE starting the installation and familiarize yourself with the various parts of this product.

The installation of this product requires electrical and plumbing connections that use specific skills and knowledge. If you are unsure or not qualified to make these connections, consult a qualified plumber, electrician, or installer. Professional installation is suggested.

This manual contains step-by-step installation instructions for the In-wall Water Dispenser. Followed carefully, these instructions will result in trouble-free installation of this Elkay Manufacturing Company (Elkay) product. Additional use and care documents can be found on the Elkay website at ***http://www.elkay.com/support***.

Any deviations, additions, or deletions from the described methods, without the prior written approval of our Customer Care department, will void the warranty covering this product.

Make sure the installation and use of this product meet all local, state, and federal plumbing and electrical codes.

⚠ WARNING

Carefully read, understand, and follow all the instructions in this manual before using the product. Improper installation, use, or maintenance of this product could cause a dangerous situation resulting in personal injury or even death.

Do not operate power tools unless you read and understand the instructions and warnings in this and all other applicable manuals. Proper use of tools and the products described in this manual is your responsibility.

NOTICE ***Failure to follow these instructions could also cause a situation that results in water damage, or other damage to floors, walls, pipes, or electrical wiring.***

1.2 Models Covered in Manual

LBWD00BKC	Midnight
LBWD00WHC	Aspen White

1.3 Serial Number Location

Please locate the serial number located under the front panel, as shown and use this serial number when contacting us with questions concerning the installation of this product.

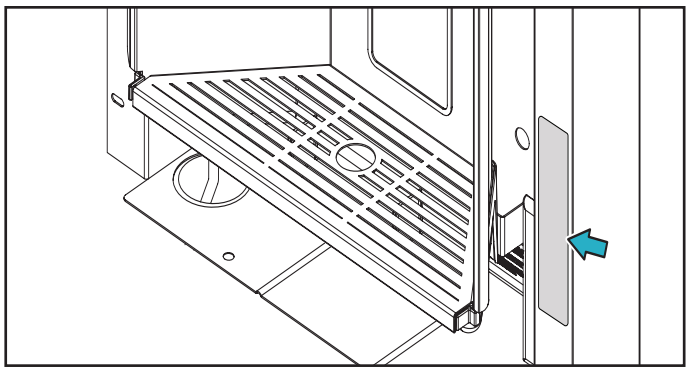

1.4 Contact Information

General Information
Elkay Manufacturing Company
1333 Butterfield Rd.
Suite 200
Downers Grove, IL 60515

Phone: 630.574.8484
Email: consumer@elkay.com
Website: http://www.elkay.com

USA/Canada Customer Care
Phone: 800.476.4106
Phone: 800.260.6640 (Repair Service)
Email: CustCare@Elkay.com

International Customer Care
Phone: 630.575.4755
Email: IntlCare@Elkay.com

Installation Services
Phone: 800.952.8064
Email: installservice@elkay.com
Website: http://www.elkay.com/contact-us/install

1.5 Disclaimer

The information contained in this manual is given free of charge. This information is based on reliable technical data and is intended for people with the technical knowledge to install, use, and maintain this product at their own discretion and risk. Elkay assumes no responsibility for results obtained or damage incurred from the use of this material either in whole or in part by the buyer.

1.6 Notice of Changes

The information, specifications, and illustrations in this manual are based on the information that was available at the time this material was written and can change at any time.

Dimensions are given in inches (") and millimeters (mm).

1.7 Radio Frequency Compliance

The water dispenser and filter communicate with each other through a Near Field Communication (NFC) device. This short-range, wireless connectivity technology is designed to monitor the status of the filter and to alert the user when it is time to change the filter. This device complies with part 15 of the FCC Rules.

Operation is subject to the following two (2) conditions: (1) This device may not cause harmful interference, and (2) this device must accept any interference received, including interference that may cause undesired operation.

Changes or modifications not approved by the manufacturer could void the user's authority to operate the equipment.

This device complies with Industry Canada licence-exempt RSS standard(s). Operation is subject to the following two conditions: (1) this device may not cause interference, and (2) this device must accept any interference, including interference that may cause undesired operation of the device.

Le présent appareil est conforme aux CNR d'Industrie

Canada applicables aux appareils radio exempts de license. L'exploitation est autorisée aux deux conditions suivantes: (1) l'appareil ne doit pas produire de brouillage, et (2) l'utilisateur de l'appareil doit accepter tout brouillage radioélectrique subi, même si le brouillage est susceptible d'en compromettre le fonctionnement.

This equipment complies with FCC radiation exposure limits set forth for an uncontrolled environment. The user should avoid prolonged exposure within 20 cm of the antenna, which may exceed the FCC radio frequency exposure limits.

1.8 Warranty

This product is covered by a Limited Warranty and Elkay will not be held responsible for damage of any kind in connection with the installation of the product or http://www.elkay.com/warranty and click on drinking water products.

1.9 Definitions

DANGER - Indicates death or serious injury will result if proper precautions are not taken.

WARNING - Indicates death, serious injury or property damage can result if proper precautions are not taken.

CAUTION - Indicates some injury or property damage may result if proper precautions are not taken.

Authorized Service Personnel – Factory trained personnel or personnel having working knowledge of electrical, plumbing and machine (appliance) maintenance procedures.

2. Safety

Think Safety

Before performing any work, read and understand the safety instructions in this manual.

2.1 General

The Elkay Manufacturing Company (Elkay) cannot anticipate every possible circumstance that might involve a potential hazard during the installation or maintenance of this product. The warnings and instructions in this Installation Manual are, therefore, not all-inclusive. If a tool, installation procedure, or work method that is not specifically recommended by Elkay is used, you must be satisfied that it is safe for yourself and others. You should also make sure that the product will not be damaged by the methods you choose.

Most work-related accidents are caused by failure to observe basic safety rules or precautions. An accident can often be avoided by recognizing potentially hazardous situations before an accident occurs. As you install and maintain this product, you must be alert to potential hazards. You should also have the necessary training, skills, and tools to perform any installation or maintenance procedure.

2.2 Safety Alert Symbol

This is the safety alert symbol. It is used to alert you to potential personal injury hazards. Obey all safety messages that follow this symbol to avoid possible injury or death.

This manual contains WARNINGS, CAUTIONS, NOTICES, SAFETY INSTRUCTIONS, and NOTES which must be followed to prevent the possibility of improper service, damage to the equipment, personal injury, or death. The following keywords call the reader's attention to potential hazards.

Hazards are identified by the "Safety Alert Symbol" and followed by a signal word such as "WARNING" or "CAUTION".

2.3 Personal Safety

⚠ DANGER

- **Please read these instructions completely before starting the installation or performing any service. Failure to follow the instructions and safety precautions in this manual can result in serious injury or death.**
- **After installation, keep these instructions in a safe location for future reference.**
- **Electric supply must be identical in voltage, cycle, and phase to that specified on nameplate.**
- **Electrical supply must have Ground Fault Circuit Interrupter (GFCI) protection.**
- **A means for disconnecting electrical supply to the unit must be incorporated in the fixed wiring in accordance with wiring rules. This is to allow electrical disconnection of the unit from electrical supply after installation.**

⚠ WARNING

These warnings indicate a potentially hazardous situation which, if not avoided, could result in serious injury or death. Follow all instructions related to the installation and/or maintenance of this product (unit).

For use with clean, clear potable drinking water only. Do not use with water that is microbiologically unsafe or of unknown quality without adequate disinfection before the system.

Installation and connection to water and electrical mains must be in compliance with local and national laws.

All Installation and Service work must be performed by an authorized service personnel.

Personal Protection
Be sure to use all personal protective equipment, such as sturdy safety glasses, work shoes, hearing protection, and cut resistant gloves, whenever necessary, to ensure your own safety.

To avoid eye injury, always wear protective glasses with side shields when using power tools. Also, make sure no one else can be injured by flying particles when using power tools.

Always wear ear protection, such as earmuffs or earplugs, when using power tools.

Wear protective cut resistant gloves during installation to protect against sharp edges from sheet metal components.

Power Tool Hazard
To prevent personal injury or possible death, always follow the electrical safety recommendations of the power tool's manufacturer.

- Do not use power tools in an unsafe manner.
- Power tools should only be connected to a circuit protected by a ground-fault circuit interrupter (GFCI).
- If an extension cord is required, always use an appropriate extension cord.

Shock and Electrocution Hazards
Failure to follow these instructions could result in severe electrical burns, significant injuries, and even death.

Water will conduct electric current to create a short circuit, resulting in injury or death.

- Never use electric power tools around water or wet floors/surfaces.
- Keep all liquids away from electrical cords and power tools.
- If an extension cord is required, always use an appropriate extension cord.
- DO NOT create a short circuit between a source of electricity and a liquid by being in contact with both simultaneously.

WARNING

Contacting live electrical wiring with power tools or hand tools can cause serious injury or death.

- Make sure all related circuit breakers are turned OFF.
- Test for live circuits or wiring inside any wall where installation of the product requires cutting into a wall.

Prior to any maintenance, make sure the unit is disconnected from the power source and the circuit breaker is turned OFF.

Prior to installation, test for live circuits or wiring inside the wall before cutting or drilling into the wall. Before working near any electrical circuit or wiring, remove all power and use a circuit tester to verify the power has been disconnected. Contact with live electricity can cause serious bodily injury and in some cases death.

CAUTION

These cautions indicate a potentially hazardous situation which, if not avoided, may result in minor or moderate injury. Follow all instructions related to installation and/or maintenance of this product.

This appliance can be used by children aged from 8 years and above and persons with reduced physical, sensory, or mental capabilities or lack of experience and knowledge if they have been given supervision or instructions concerning use of the appliance in a safe way and understand the hazards involved. Children shall not play with the appliance. Cleaning and user maintenance shall not be made by children without supervision.

To prevent a metallic taste or increased metal content in the water due to an electrolysis process caused by electrical feedback from the grounding of electrical equipment to water supply and water waste mains, connect to these mains using non-conductive materials. The provided Filter meets this requirement.

Tripping Hazard
Personal injury can result from tripping over power cords, tools, or other installation items. DO NOT leave items laying around the work area.

Cutting Hazard
The installation of this product requires using power tools.

Keep hands away from the cutting edge of any tool used in the installation of our product.

Placing fingers in or around the cutting blades could result in serious personal injury.

Use Proper Tools
Always use proper tools which are in good working condition during the installation of the product.

2.4 Property Damage

NOTICE

Inspect Before Cutting
Make sure no electrical wiring or plumbing is present before cutting into a wall.

3. Installation Preparation - Read Before Beginning Installation

For correct and safe installation, please read these instructions completely.

⚠ DANGER

- **All Installation work must be performed by an authorized service personnel.**
- **Disconnect electrical supply serving the Installation area to reduce risk of electrocution.**
- **Unit not suitable for installations where water jets could be used.**

⚠ WARNING

- **Shut off water supply serving the Installation area to reduce risk of water damage.**
- **Ensure proper ventilation by maintaining clearance from cabinet louvers to wall on each side of Cooler as specified in Rough-In.**
- **Never wire compressor directly to electrical supply.**
- **Thoroughly flush all water lines and fittings of all foreign matter before connecting to Cooler.**
- **Warranty is void if Installation is not made in accordance with current Manufacturing instructions.**

⚠ CAUTION

- **Hose-sets are not to be used for connecting to water mains.**
- **If inlet pressure is above 105 psig (0.72 MPa), a pressure regulator must be installed in water supply line. Any damage caused by reason of connecting this product to water supply line pressure outside it's rated pressure, is not covered by warranty.**
- **Tools/Items required but not provided.**
  - Water Shut-off Valve with 3/8" (9.5mm) compression outlet.
  - Waste Trap (non-metallic)
  - Safety Glasses
  - Protective Gloves
  - Hex drives
  - Fasteners for wall type

NOTICE **The installation of this product requires electrical and plumbing connections that use specific skills and knowledge. If you are unsure or not qualified to make these connections, consult a qualified plumber, electrician, or installer for this installation. Professional installation is recommended.**

1. This water dispenser is designed for indoor use only and should not be installed outdoors or in a humid environment. This water dispenser should not be installed on exterior walls.

NOTICE **A water supply pressure below 40 psi will result in decreased water flow through the unit and damage to the product. A pressure above 105 psi will also cause damage to the product.**

2. Make sure the water supply pressure to the product is between 40 and 105 psi. The water dispenser with filter requires 40 psi minimum water pressure. The optimum water pressure is 60 psi. The noise level is lower than 70 dB.

3. Use care when opening and removing the packaging to prevent damage to the product.

   a. Inspect the product for any shipping damage and report it immediately to the location of purchase. Installation of a damaged product will void the warranty.

   b. Refer to part list on page 14 to confirm that all parts have been included for the proper installation of this product. Contact the location of purchase if damaged parts are found.

NOTICE **Make sure no electrical wiring, potable water inlet pipes, or drain water outlet pipes will be damaged during installation of the product. Damage to any of these items can cause electrical damage, fire, and/or water damage.**

4. Shut off the water supply source and disconnect power to the electrical circuit being used to operate the product before starting the installation.

4. Installation

4.1 Tools Required

Tool	Used For
Tape Measure	Locate the mounting opening.
Wall Cutting Tool	Remove section of wall to insert unit.
Level	Proper mounting into the wall cavity.
Phillips Screw Driver	Remove electrical box cover.
Various Electrician's Hand Tools	Connecting power source to the unit's wiring.
Various Plumber's Hand Tools	Connecting unit's plumbing to the household water source and waste drain.
3/32 Allen Wrench	Remove the front covers.
1/4" Socket Wrench	To release/fix grounding screw.

4.2 Parts Required not Included

Description	Qty.
#8 Flathead Screws 1-1/4" long.	8
Electrical	
12/2 with ground electrical wire (depending on local building codes the installation could require rigid conduit, armored cable, or plastic sheath NM-B cable).	—
Electrical wire nuts (appropriate size).	—
GFCI circuit (connected into an electrical circuit).	1
All-pole Switch (A disconnection incorporated in the fixed wiring shall be provided, including an all-pole switch with appropriate rating voltage and current connecting with supply mains and the product).	1
Water	
3/8" flexible water tubing (copper or plastic) (insulated).	—
Quarter-turn shut off valve at the location of the water source.	1
1/4" copper or plastic tubing if a remote filter is installed (insulated)	15 feet or less
Optional Catch Basin Drain	
1-1/4" P-trap and related parts.	—
Plumbers Putty	—
Additional 3/4" drain hose if the installation requires a longer drain hose than the supplied 13" long hose.	—

4.3 Critical Depth Check

1. Make sure the wall cavity is deep enough to house the water dispenser (dimension A).
2. Make sure there is adequate space to route electrical wiring between the wall and the filter box which is approximately 1-5/8" for standard 2 x 4 wall construction.

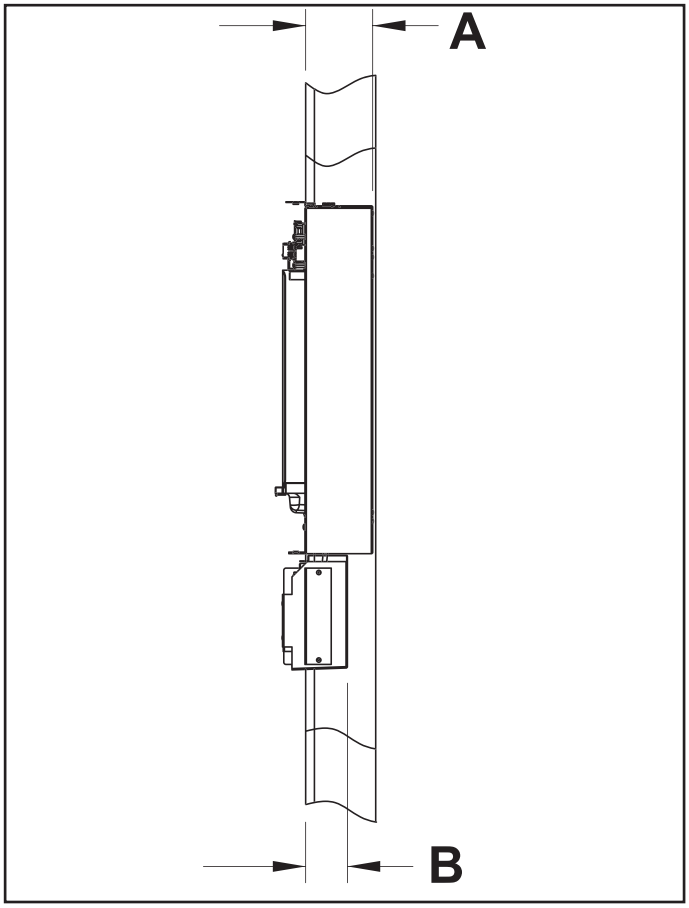

Water Dispenser
A) 3-7/8" (97 mm) deep.

Filter Box Unit
B) 2-3/8" (61 mm) deep

4.4 Cutting Size and Mounting Dimensions

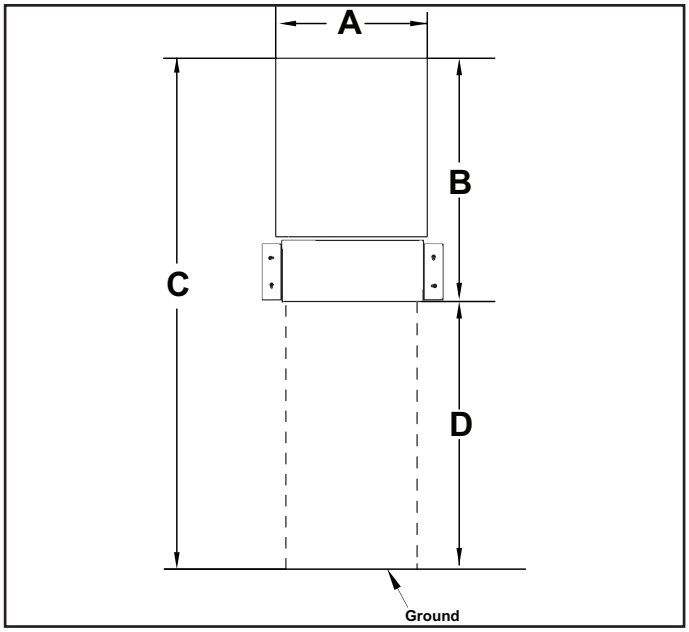

Recommended Dimensions

A - Unit width opening should be 14-1/2" (368 mm) wide
B - Unit height with filter box opening should be 26-1/2" (673 mm) high
C - Suggested unit height from the floor is 56-3/4" (1441 mm)
D - Optional cut from bottom of water dispenser to floor for plumbing and electrical access

4.5 Plumbing and Electrical Key

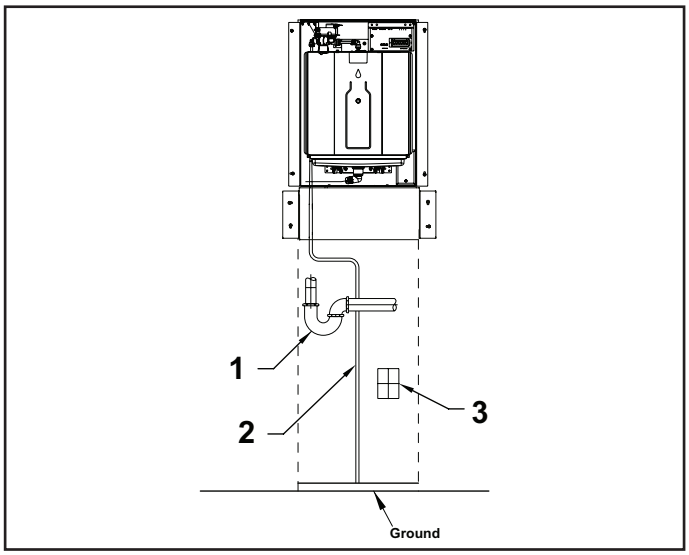

Plumbing and Electrical Key
1) P-trap. 2) 3/8 inch flexible water tubing. (3) Electrical box.

Note: *Always consult local plumbing codes prior to installation.*

Note Item 1: *If the p-trap is sealed within the wall, under the water dispenser, all the plumbing joints must be glued. The glue must be appropriate for the PVC pipe utilized. If the p-trap uses threaded components, they must be easily accessible.*

Note Item 2: *According to most electrical codes, the electrical box cannot be sealed inside a wall cavity with no access. If the electrical connection is placed under the unit, a user supplied removable wall cover will be required to access the junction box.*

4.6 Water Dispenser Installation

Use the following sections to install the water dispenser and filter box.

4.6.1 Installing Water Dispenser

1. Cut the opening into the wall using the suggested mounting dimensions as a guide. See figure 4.4.
2. Place the unit into the wall cavity and slide it up against the drywall at the top of the opening. The unit is designed with 1/4 inch overlap to conceal any irregularities at the top of the wall opening.

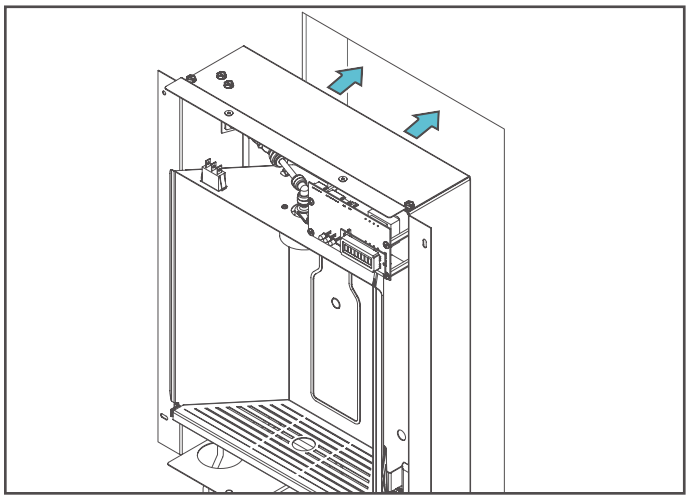

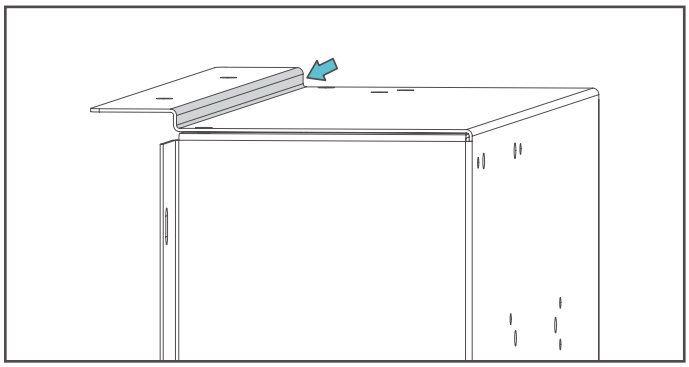

Note: *A 1/4 inch offset helps conceal any irregularities at the top of the wall opening.*

3. Using a bubble level, straighten the water dispenser and attach it to the wall studs using four #8 flathead screws.

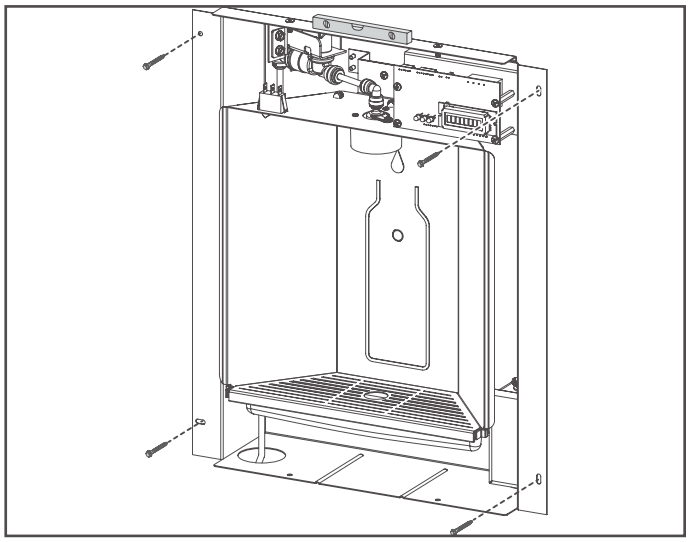

4. Locate the electrical gang box, at the lower right-hand corner of the water dispenser, and remove the cover.

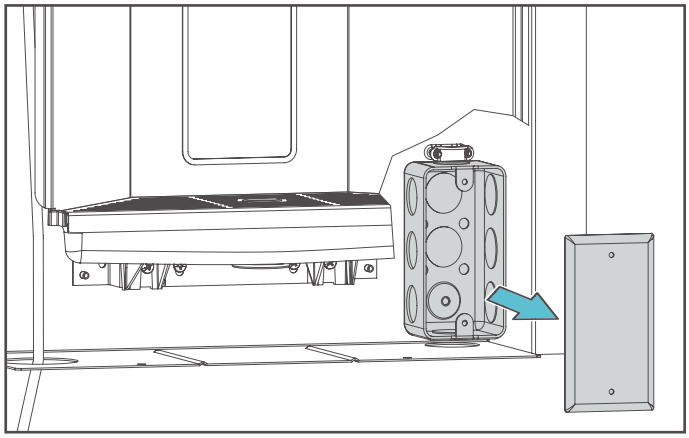

CAUTION **Follow all safety practices and industry regulations and standards when connecting any electrical device. A 15 AMP GFCI Circuit Breaker is required for safe installation.**

5. Connect a 115V, 60Hz power supply to the water dispenser. Route the wiring through the wall into the bottom of the electrical gang box.

   a. Route the appropriate electrical wiring through a wiring clamp into the gang box.

   b. Tighten the wiring clamp to prevent the wire from being pulled out of the gang box.

   c. Connect black wire to supplied voltage line (black) wire and the brown wire to neutral.

   d. Use installer provided wire nuts to insulate the connections.

   e. If required by code a green grounding screw can be used to connect a grounding wire inside the gang box.

   f. Reinstall the gang box cover.

NOTICE **Do not use a cord with a three prong plug to power this unit.**

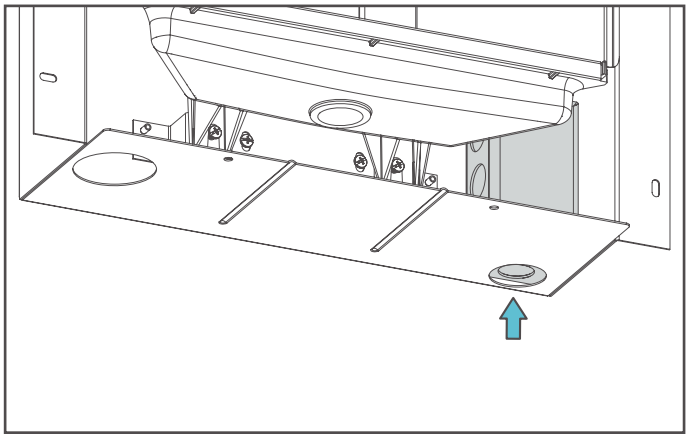

Note: *The space behind that filter box is limited so make sure any electrical wiring will not interfere with mounting the filter box into the wall. Refer to "4.3 Critical Depth Dimensions" on page 7 for additional information.*

4.6.2 Installing the Filter Box

1. For installation of the filter box below the water dispenser, first replace the front cover of the water dispenser to help locate and align the filter box under the water dispenser.

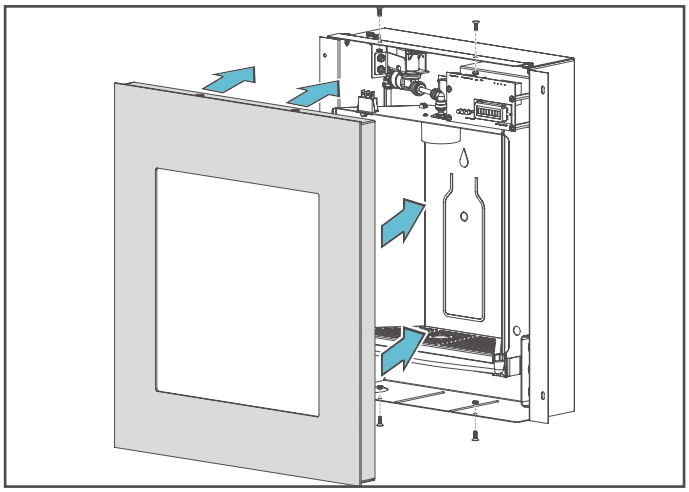

NOTICE ***I*t is recommended to attach the front cover with the top two mounting screws to prevent it from falling away from the water dispenser while the filter unit is being installed.**

2. Place the filter box into the wall opening and slide it up against the bottom of the water dispenser. Make sure the filter box is in alignment with the water dispenser and, using four #8 flathead screws, start the screws to hold the unit in place.

   Do not completely tighten the screws until the filter unit cover is installed and the fit between the water dispenser cover and the filter cover is checked.

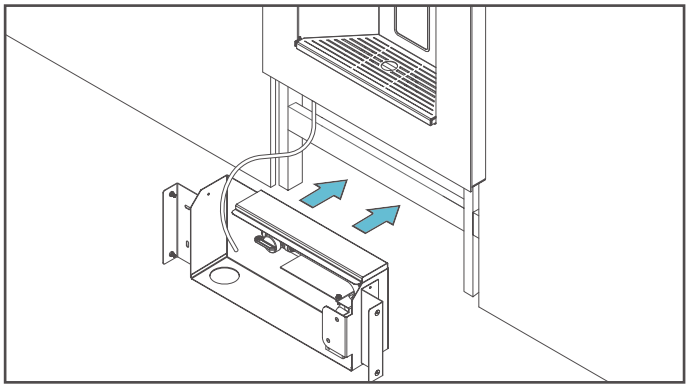

Note: *Some side-to-side and up-and-down movement of the housing is capable to accurately align the filter unit with the water dispenser.*

3. Replace the filter unit cover and check the gap between the two covers. Adjust the filter box to create an even gap all the way across the units. Tighten all screws.

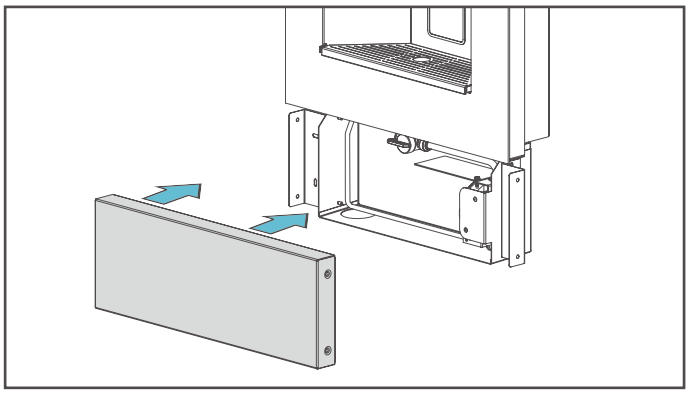

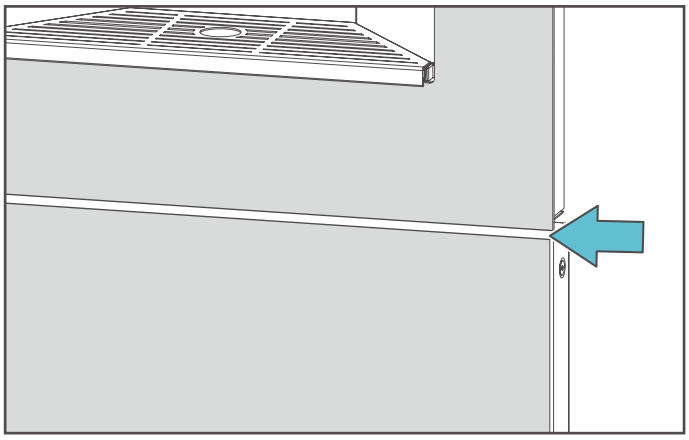

Note: *Create an even gap across the entire unit.*

4. After aligning the two sections, remove the front cover from the filter unit by removing the four flat head screws from the right and left side of the cover using a 3/32 Allen wrench.

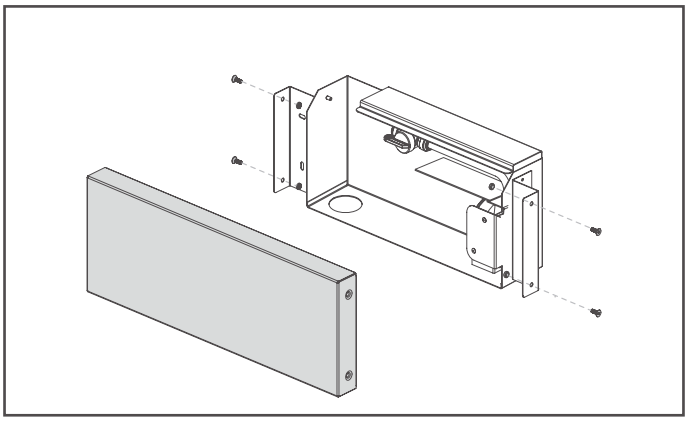

4.6.3 Connecting the Water Lines

1. Connect the 1/4 inch water line from the water dispenser to the filter housing.

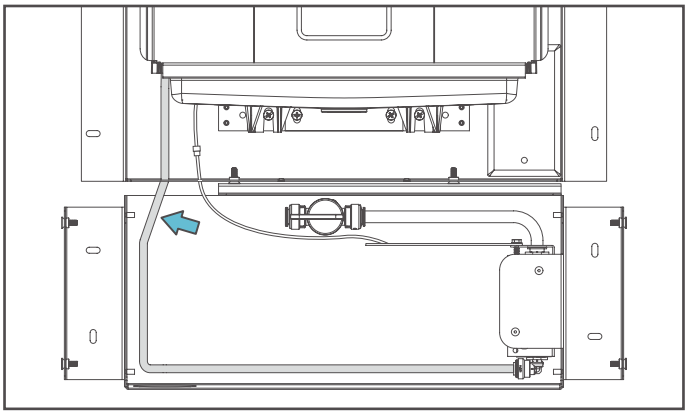

2. Connect the NFC wire.

NOTICE **Do not disconnect the 1/4 inch tubing from the water valve at the top of the water dispenser. This connection has been factory tested to be leak-free and could result in water leaking into the unit if this connection is changed.**

   a. Connect the 1/4 inch tube to the fitting below the filter, as shown.

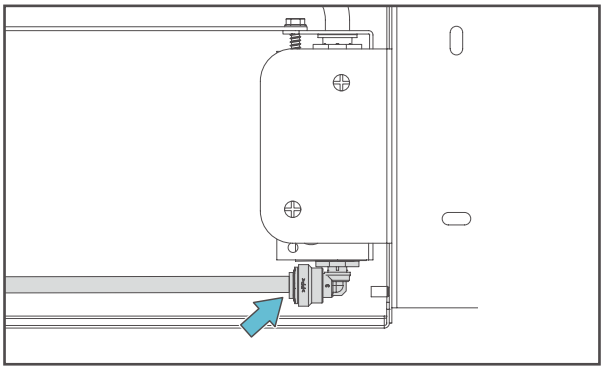

3. Connect an installer supplied 3/8 inch water supply tube to the quarter-turn shutoff valve, as shown. The type of tubing, copper or plastic, should meet all local regulations and building codes.

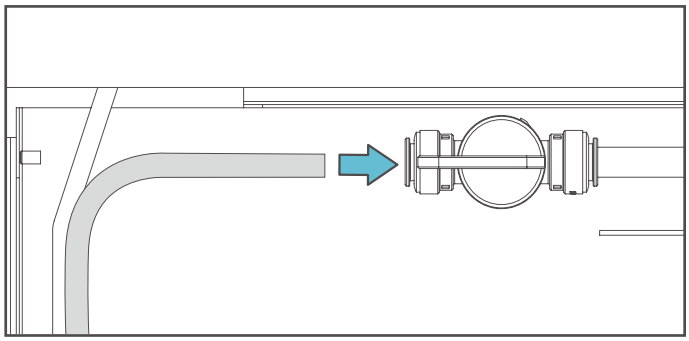

Note: *Elkay also recommends installing a shutoff valve at the source of the water supply for the water dispenser.*

4.7 Connecting Catch Basin Drain (Optional)

Installing the drain is highly recommended to prevent basin overflow.

The water dispenser does not require a drain connection to the household wastewater plumbing. The water dispenser has a built-in catch basin that will hold the typical overflow that can occur when using the product.

Some local building codes, however, may require a wastewater drain to prevent the potential overflow of water. The following steps cover the installation of the drain.

1. Remove the two screws attaching the drain basin to the water dispenser. Remove the drain basin.

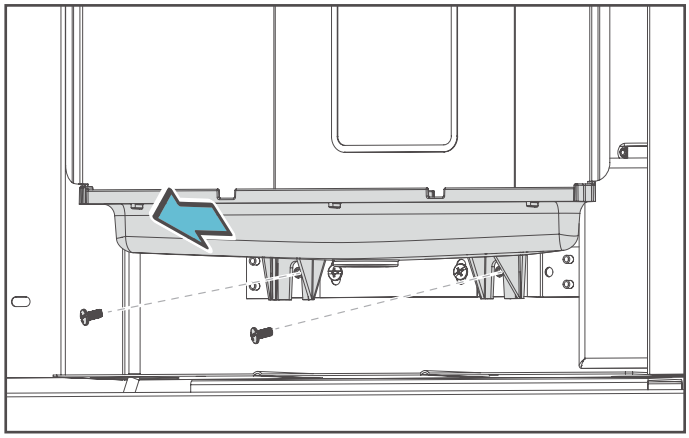

2. Place the drain basin on a flat, hard surface, such as a piece of sacrificial wood. Carefully drill a hole in the basin using a 1-inch hole saw using the centering-dimple as a guide to center the hole saw. Do not use a 1-1/8" hole saw as this will make the opening too large.

Note: *Do not disconnect the 1/4 inch tubing from the water valve at the top of the water dispenser. This connection has been factory tested to be leak-free and could result in water leaking into the unit if this connection is changed.*

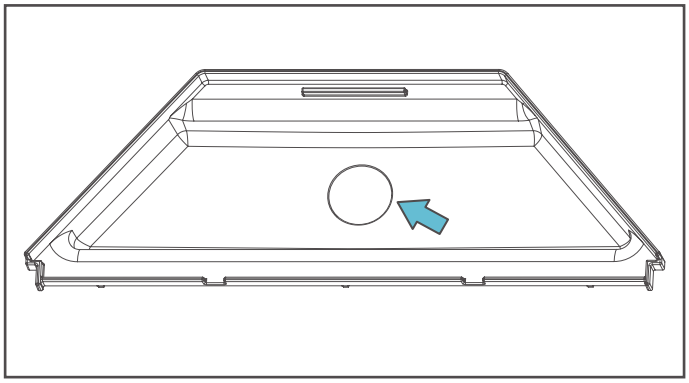

3. Trial fit the strainer. If the strainer does not fit, carefully open the size of the hole. If it fits well, place a small amount of plumbers putty around the lip of the strainer flange and insert it into the hole. If the flange does not fit, carefully open the size of the hole.

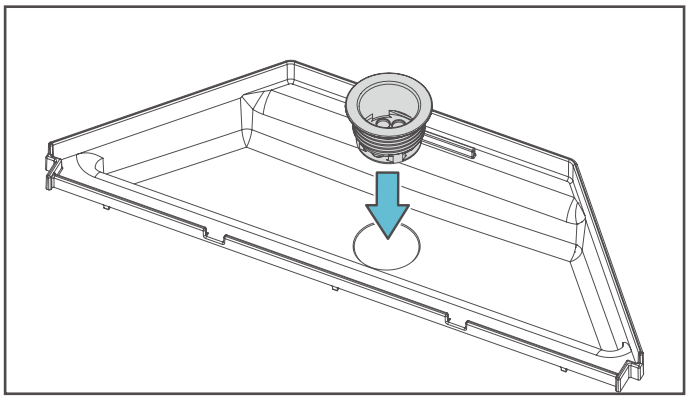

4. Install the O-ring over the strainer threads.

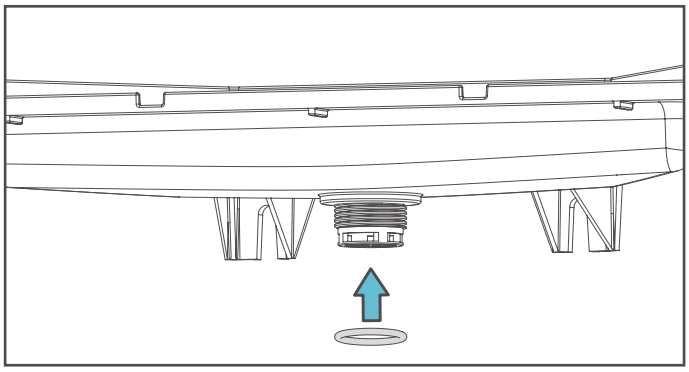

5. Thread the strainer into the drain adapter. Needle-nose pliers can be used to turn the drain adapter. Tighten the connection to create a watertight seal. The drain adapter must be facing to the left.

Note: *Twisting the strainer instead of the drain adapter can compromise the seal created by the plumber's putty.*

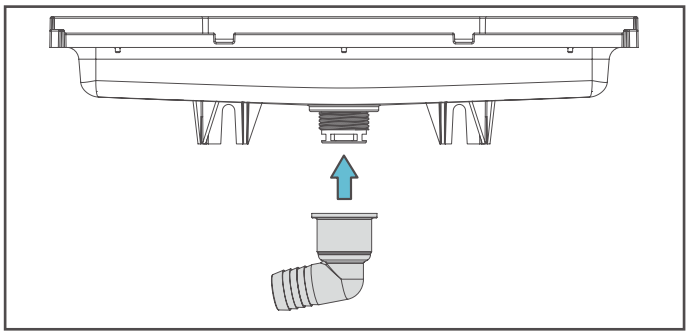

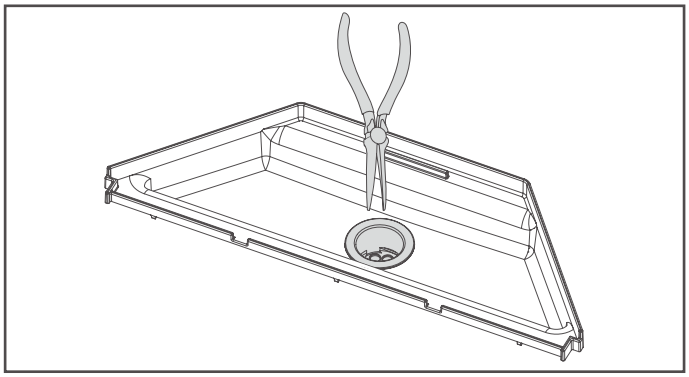

6. Attach one end of the 3/4 inch flexible drain hose to the 3/4 inch barbed drain adapter connection using the supplied hose clamp. The supplied flexible drain is 13 inches long. If a longer drain hose is required, it must be installer-supplied.

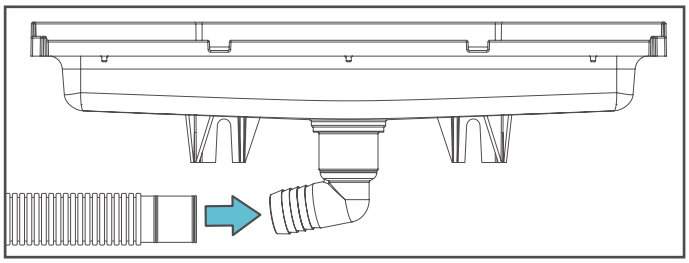

7. Place the drain basin back into the water dispenser and reinstall the two screws.

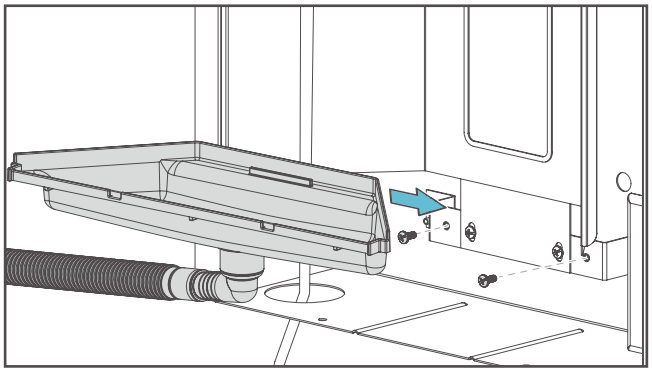

8. Route the drain hose through the filter box and attach the other end to the p-trap drain adapter using a hose clamp. The drain adapter is designed to be glued into a 1-1/4 inch PVC pipe.

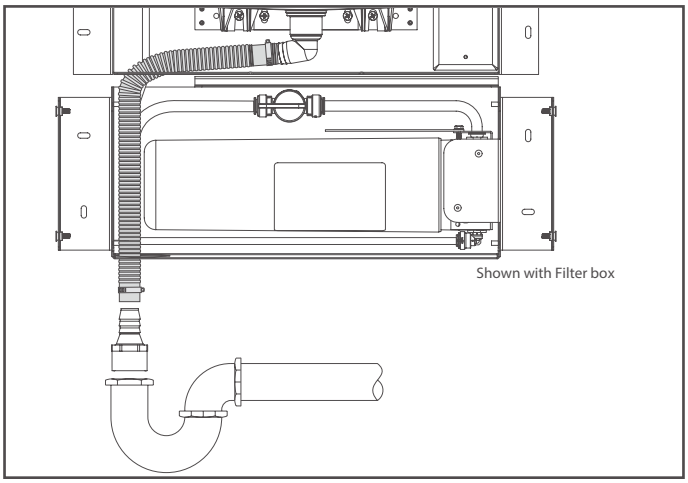

9. Connect the drain adapter into the household waste drain pipe.

   If the p-trap is located inside a sealed walled, it must have permanently-glued joints. If the p-trap is in an accessible location, a standard non-glued p-trap is acceptable.

Note: *Always consult local plumbing codes prior to installation.*

10. Install metal grate cover. Do not install the drip tray since the unit is plumbed into the household waste line.

11. Installing the Filter

   a. First, write the current date on the filter in the space provided.

   b. Attach the filter cartridge to the filter head by inserting firmly into the filter head, turning clockwise to install so the label is facing downward. Continue to start up instructions.

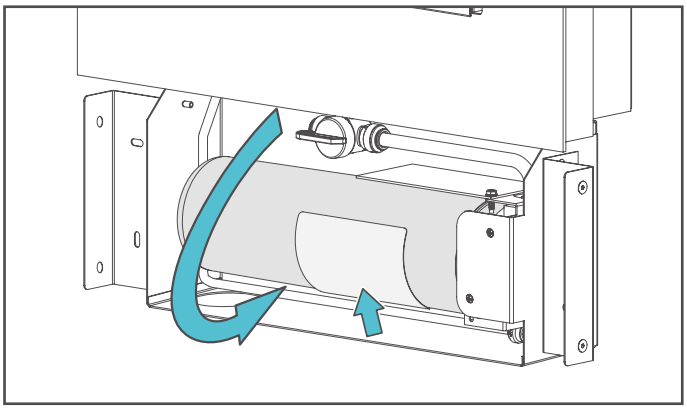

5. Startup

1. Open the shutoff valves in the filter box and water supply. Check for any water leaks.

2. Place the ON/OFF switch in the upper left-hand corner of the water dispenser in the OFF position. Turn ON power to the unit (typically a circuit breaker).

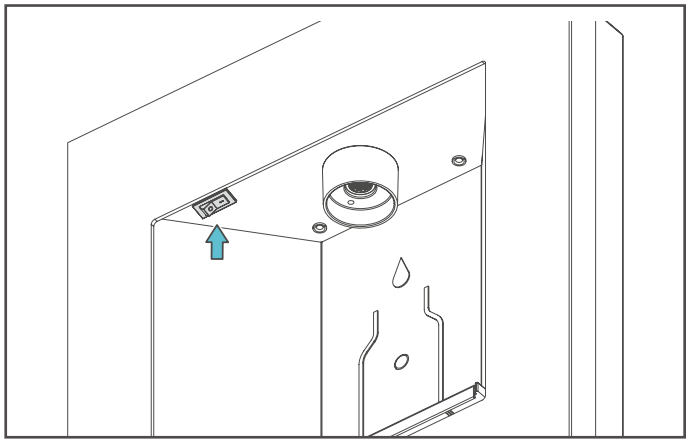

3. Remove the scratch resistant protective layer that is covering the glass face, filter cover, and back wall covering.

Note: *Not removing this layer will activate the IR sensor.*

4. Move the water dispenser's power switch to the ON position and make sure the LED lights are lit on the circuit board.

5. Place a container under the water dispenser spout to activate the fill sensor and dispense at least one gallon of water to bleed off any trapped air from the supply lines and filter as well as flush any fine carbon particles from the filter.

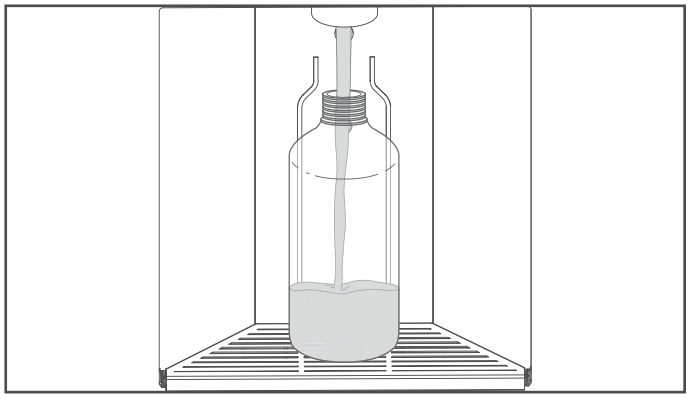

Note: *The water dispenser is set to automatically shut off after 16 seconds or 13 ounces of water has been dispensed to prevent overflow and potential flooding so multiple activations will be required to get the required one gallon of water flow through the unit.*

6. If there are no leaks and the unit is functioning correctly, install the water dispenser's glass front cover using the flathead screws and a 3/32" hex wrench. Installation of the water dispenser is complete.

7. Install the filter box cover using the flathead screws and a 3/32 inch Allen wrench.

8. Upon initial startup, the PLASTIC BOTTLES SAVED indicator panel should show several bottles have been saved due to the water used to initially start up the unit.

9. The left-most FILTER LIFE indicator light should also be lit. This light shows the filter is functioning correctly and has used less than 65 percent of its capacity.

   When the middle blue light illuminates, the filter has reached 66 percent of its life and will need to be changed soon. When this indicator light comes on, a replacement filter should be ordered.

   The right-most red light will illuminate in red and indicates that the filter should be changed.

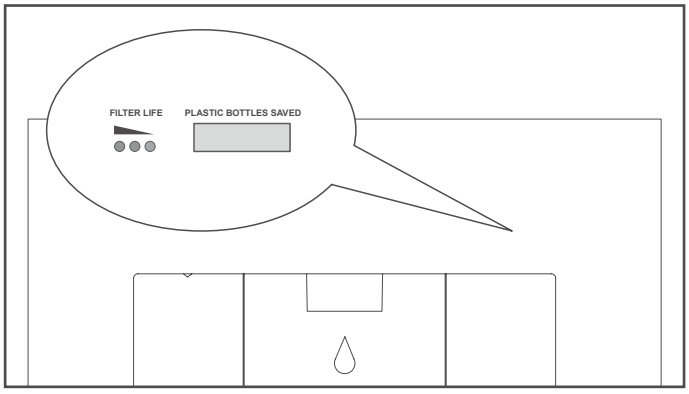

10. Once the installation is complete, the water has been turned on, and any trapped air has been bled from the system re-check for any water leaks.

11. Enjoy fresh filtered water with your new Elkay Water Dispenser.

Replacement Parts List

ITEM NO.	PART NO.	DESCRIPTION
NS	1000004698	Fitting - Hose to Trap
1	1000005397	KIT - Solenoid
2	1000005396	LED Bezel, KIT - Harness
3	1000005939	Alcove, KIT - Alcove
4	1000005392	KIT - Drain Basin
5	1000005846	Switch - Rocker LIV
6	30004C	Box - Conduit
7	1000005393	Lens, KIT - IR
8	56331C	Connector
9	70793C	Elbow 1/4 O.D. X 90
NS	71300C	2,250 Gallon PFOA/PFOS (PFAS) Filter
10	1000005454	KIT - Filter Head and Bracket Assembly
NS	1000005347	KIT - Replacement Glass - Black
NS	1000005348	KIT - Replacement Glass - White
11	1000001812	KIT - Bottle Filler Drain
12	1000005394	KIT - Control Board
13	1000005395	KIT - NFC Reader
NS	EFBLIVSC	KIT - Filter Box

NS = NOT SHOWN

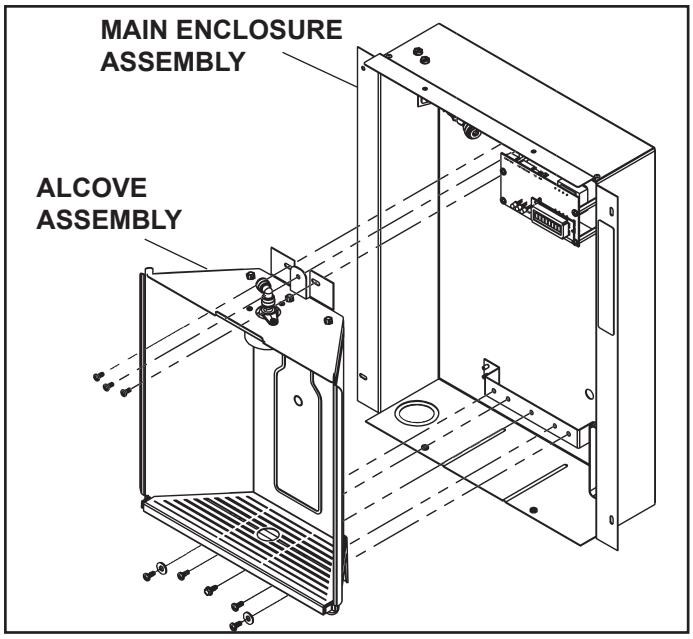

Fig. 1

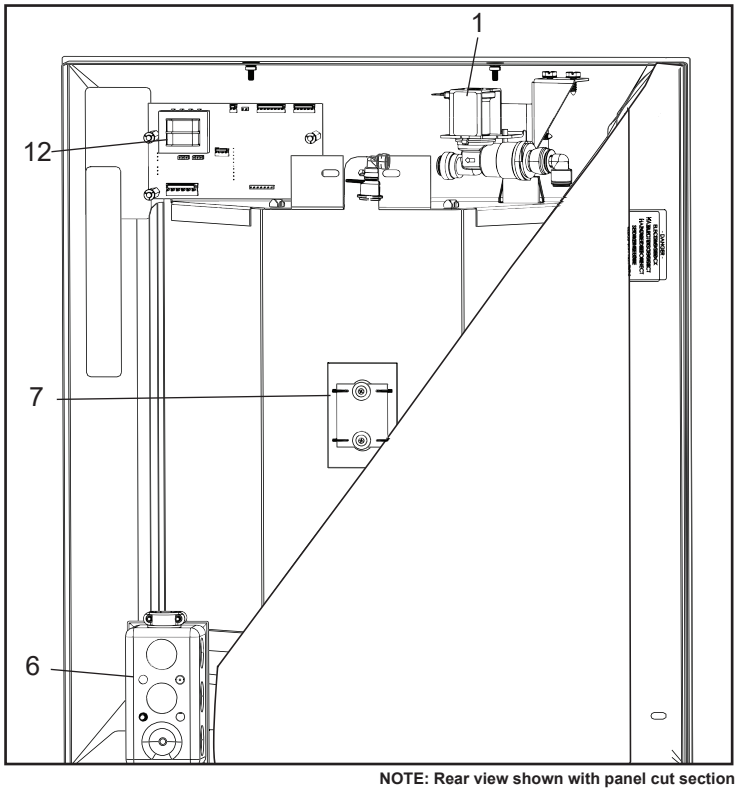

NOTE: Rear view shown with panel cut section

Rear View of Water Dispenser

Fig. 2

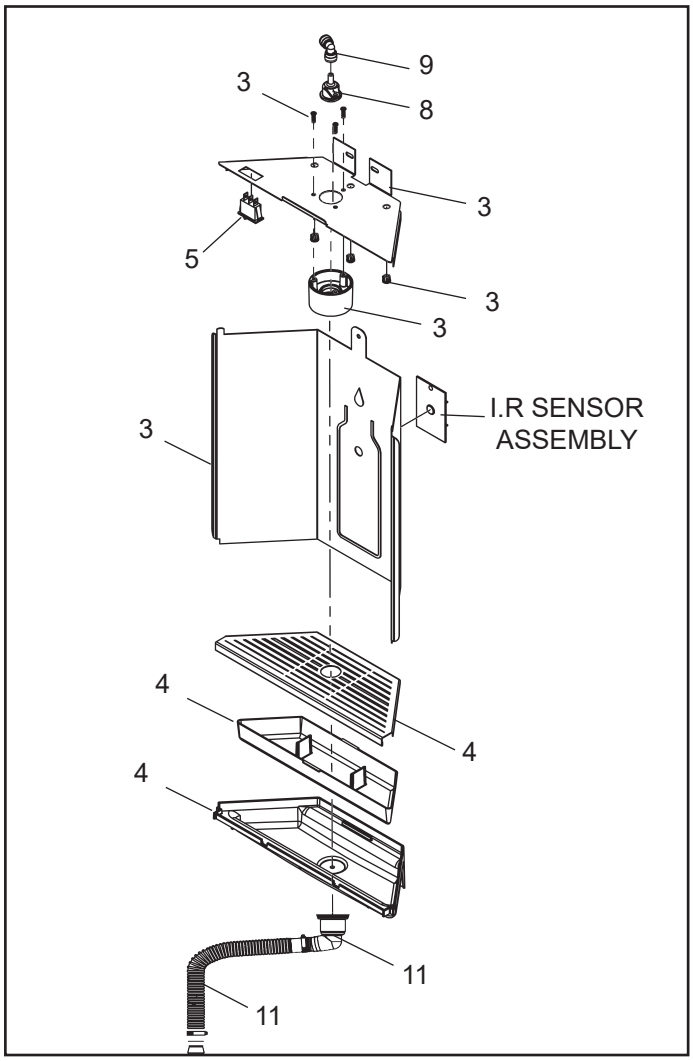

Alcove Assembly

Fig. 3

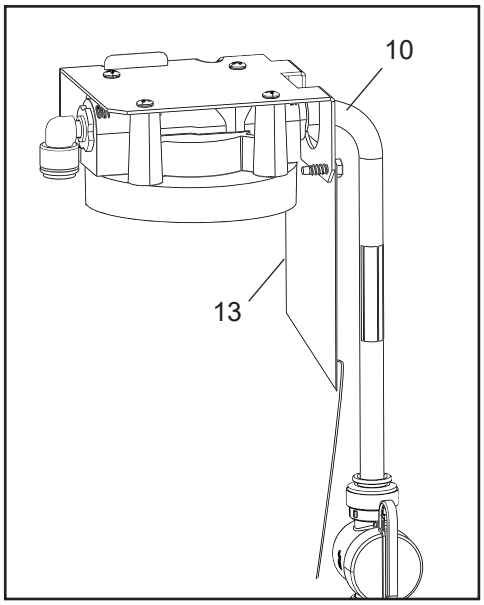

Filter Head Assembly
Fig. 4

Wiring Diagram

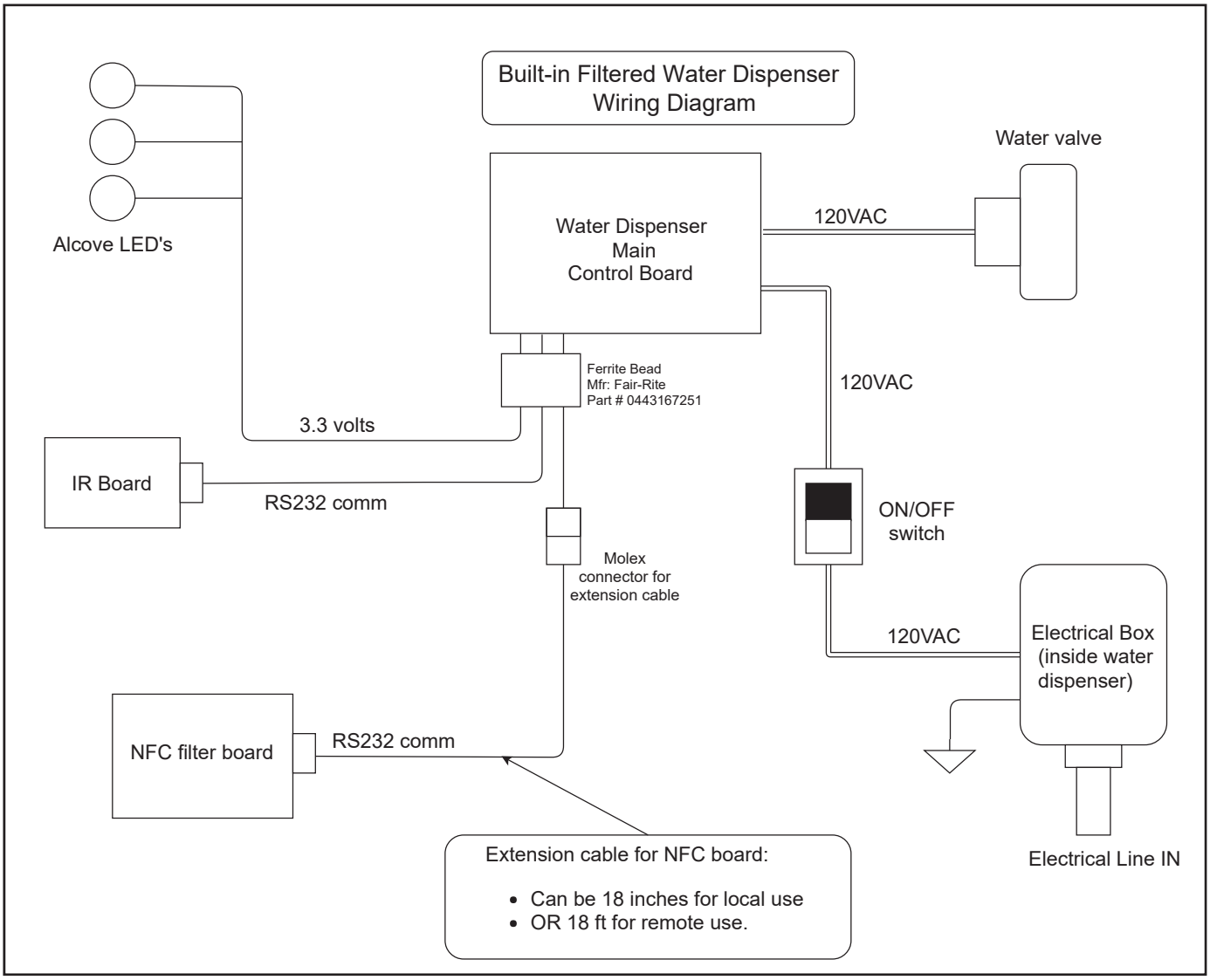

6. Troubleshooting

Description	Possible Cause	Remedy
Water is not getting cold.	Standard water dispenser (non-chilled)	Standard unit only supplies ambient temperature water.
	Water chiller is not operating properly.	Refer to water chiller manual.
Water runs continuously from water dispenser.	Sensor is defective or dirty.	Clean or replace sensor.
	Solenoid or solenoid diaphragm is defective.	Replace solenoid water valve. *Note: To verify faulty solenoid, disconnect the power while water is running. If water flow does not stop immediately then replace the solenoid.*
Low water flow.	Supply water pressure is less than required.	Water pressure must be between 40 and 105 psi.
	Filter is plugged.	Replace filter.
	Solenoid water valve not opening fully.	Replace solenoid water valve.
No water flow.	No electrical power.	Restore power to the unit.
	Water shut-off valve(s) closed.	Open all shut-off valves (one is located inside the filter box if installed and another may be at the water source).
	Bottle sensor is not operating properly.	Sensor is malfunctioning and must be replaced.
	Blocked or damaged water line.	Locate affected line and remove blockage or damage.
Blinking red light.	No filter.	Replace filter.
	Filter incorrectly installed.	Check filter is completely installed.
Blinking red and blue light.	Filter wire disconnected.	Check filter cable connections.

7. Frequently Asked Questions (FAQ)

For FAQ questions refer to the Elkay website elkay.com/liv.

You can find installation and filter replacement videos on Youtube under Liv installation and filter replacement.

2000000350

Patent zurnelkay.com/patents

PRINTED IN U.S.A.

FOR PARTS, CONTACT YOUR LOCAL DISTRIBUTOR OR CALL 1.800.834.4816
ELKAY MANUFACTURING CO. • 1333 BUTTERFIELD ROAD SUITE 200 • DOWNERS GROVE • IL 60515 USA • 630.574.8484 • www.elkay.com