ELKAY® With FLEXI-GUARD®

## INSTALLATION & USE MANUAL

# *SWIRLFLO® Refrigerated Fountains with FLEXI-GUARD® Bubbler and ezH2O® Bottle Filler*

EZWS-ERPB8-RF

LZWS-LRPB8-RF

**IMPORTANT**

THIS IS AN INDOOR APPLICATION ONLY.
ALL SERVICE TO BE PERFORMED BY AN AUTHORIZED SERVICE PERSON.

INSTALLER

**CAUTION:** Review these instructions before beginning installation. Be sure that installation conforms to all plumbing, electrical and other applicable codes.

**WARNING:** When installation is complete, ensure these instructions are left in the plastic bag provided inside the installed unit for future reference.

**WARNING:** Service to be performed by authorized service personnel only.

NOTE: It is common practice to ground electrical hardware such as telephones, computers and other devices to available water lines. This can, however, cause electrical feedback in the plumbing circuit, which results in an “electrolysis” effect occurring in the fountain. This may result in water which has a metallic taste to it or has a noticeable increase in the metallic content of the water.

When inspecting plumbing circuit, remember the line may be grounded some distance from the installation, and may occur outside the building or area in which the unit is being installed.

This condition can be avoided (in most cases) by using recommended materials during installation. Any drain fittings provided by the installer should be made of ***plastic*** which will *electronically isolate* the fountain from the remainder of the building’s plumbing circuits.

Model LZWS-ERPB8-RF

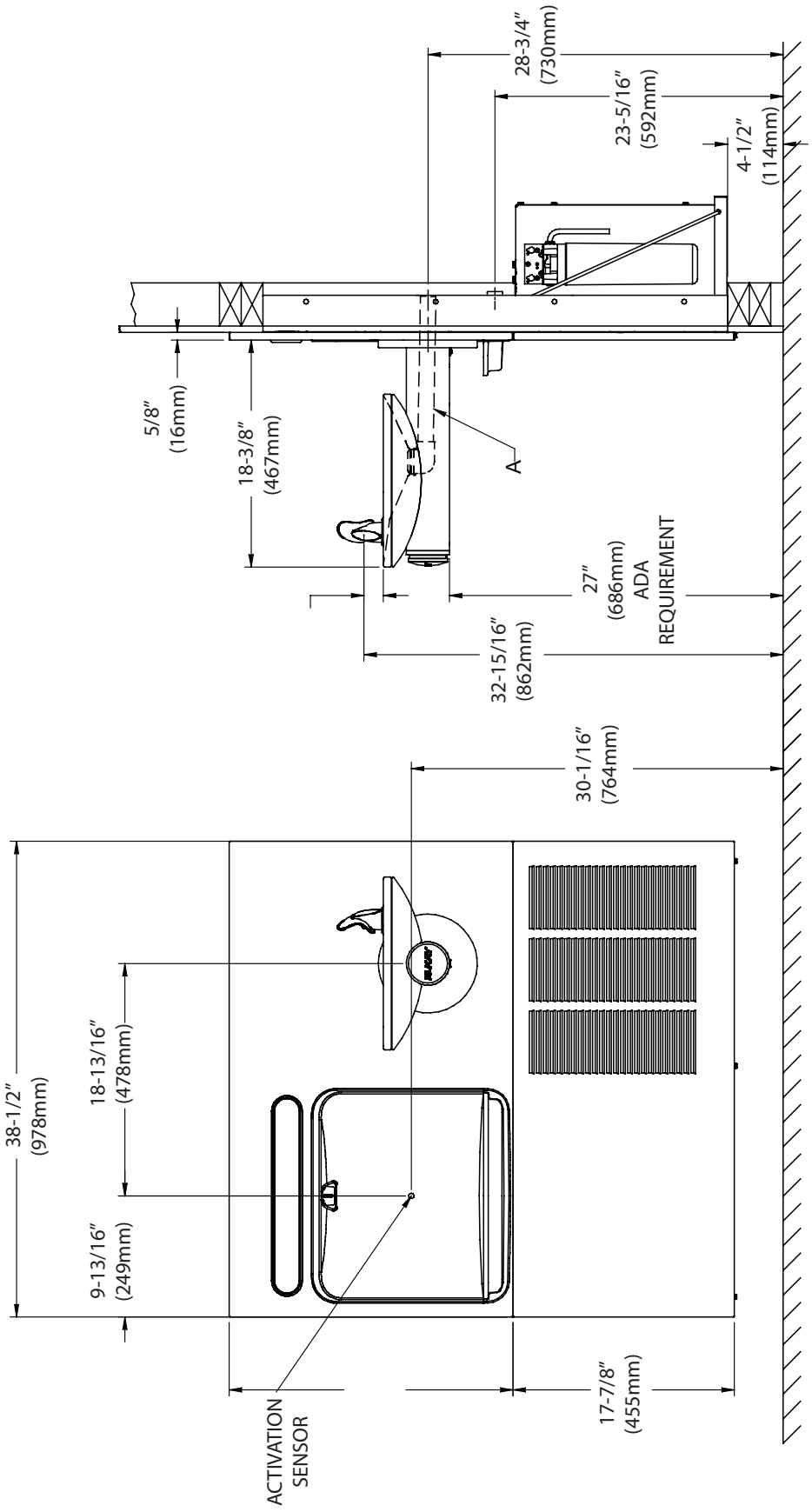


**LEGEND**
**A = 1-1/4" Waste Tube**
**Maximum Water Supply Pressure: 105 PSI (0.73MPa).**
****NEW INSTALLATIONS MUST USE GROUND FAULT CIRCUIT INTERRUPTER *GFCI)**

***Figure 1 – Rough-in Dimensions***

# BOTTLE FILLER / FOUNTAIN RETRO-FIT CONVERSION

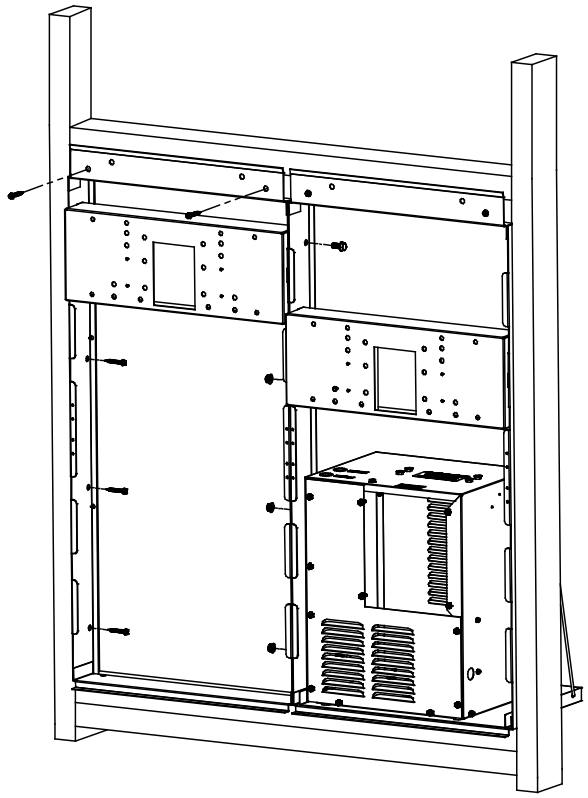

Typical current installation with fountains and panels removed.
Disassemble current Bi-Level Refrigerated fountain installation

***Figure 2***

## REQUIRED TOOLS AND MATERIALS

These tables show special tools and/or additional materials (not provided) which are necessary to complete installation of these units:

| Tools Not Provided | |
|---|---|
| **Description** | **Quantity** |
| Safety Glasses | 1 |
| Gloves | 1 |
| Electric Drill / 5/32” Bit | 1 |
| Wrenches, Crescent Wrench, | 1 |
| Channel Lock Type Pliers | 1 |
| 5/16” Nut Driver | 1 |
| Hammer / Center Punch | 1 |
| Sockets & Ratchet Wrench | 1 |

| Additional Materials Not Included | | |
|---|---|---|
| **Item** | **Description** | **Quantity** |
| 1 | Unplated copper inlet pipe | 1 |
| 2 | Service Stop/Shut-off Valve | 1 |
| 3 | 90° 1-1/4” Drain Line | 2 |
| 4 | 1-1/4” Tee Drain Line | 1 |

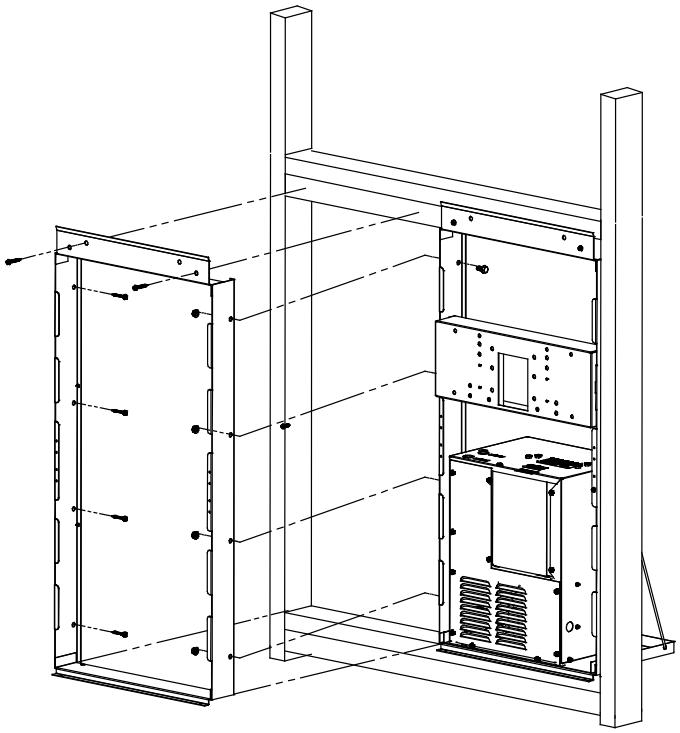

Remove left hand mounting frame, replace with new open frame (included).

***Figure 3***

1. **Prepare** for conversion. Turn off electrical power and water supply to existing installation.

2. **Disassemble** the current installation see (Fig. 2).
   - Remove existing fountains and plumbing connection lines.
   - Remove upper and lower panels
   - Remove left hand mounting frame

3. **Install** new mounting frame into left hand side of wall opening.
   - Secure mounting frame to wall opening and adjacent frame.
   - Use all fastener holes to secure the frame properly.

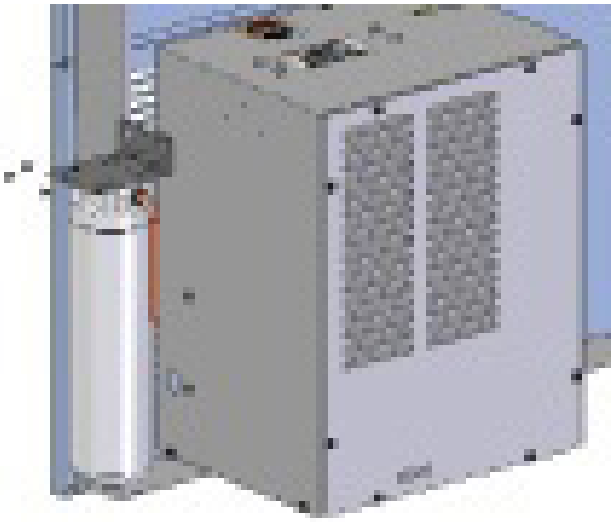

***Figure 4 – LZWS-ERPB8-RF Filter Mounting (not required with EZWS-ERPB8-RF)***

4. **(For LZWS-ERPB8-RF)** If an existing filter is not present, install filter bracket on chiller (Fig. 4), then install the filter head to the bracket, plumb from the filter outlet to the chiller inlet with ¼" poly tubing and ¼ x ¼ union, install filter.

5. **(For EZWS-ERPB8-RF)** Verify that a strainer is installed on the water supply line to the chiller (Fig. 5).

6. **Install** chiller on shelf, install ¼ x ¼ x ⅜ tee on chiller output tube. With the back panel standing close to the frame, connect ⅜" poly tube from the bottle filler to the chiller outlet tee.

7. **Install** reset switch for bottle filler (Fig. 7). Snap the switch into position after locating wires through slot. Wrap up the excess cord.

8. **Hang** main panel on mounting frame hanger. Make sure the power cord, reset switch wire & poly tube do not get pinched between the panel & mounting frame. Ensure the panel engages at the top. Align fountain holes with mounting frame holes.

9. **Remove** protective coating from main (upper) panel.

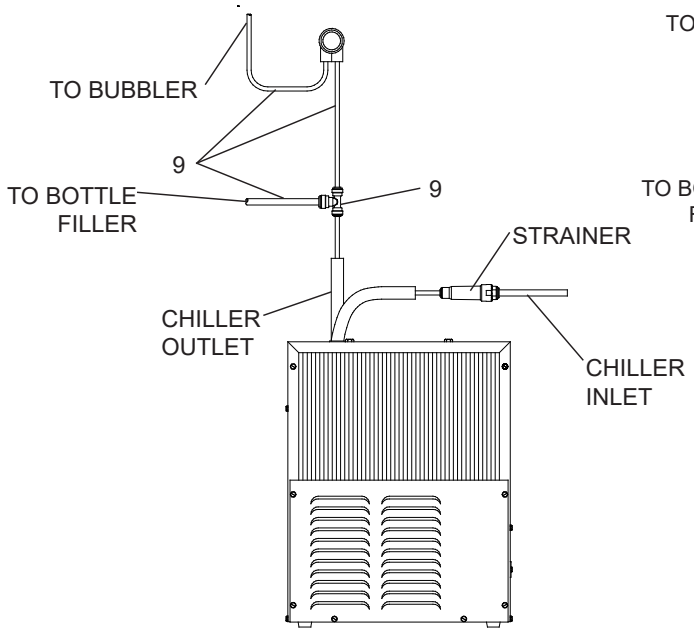


***Figure 5 – EZWS-ERPB Tube Routing***

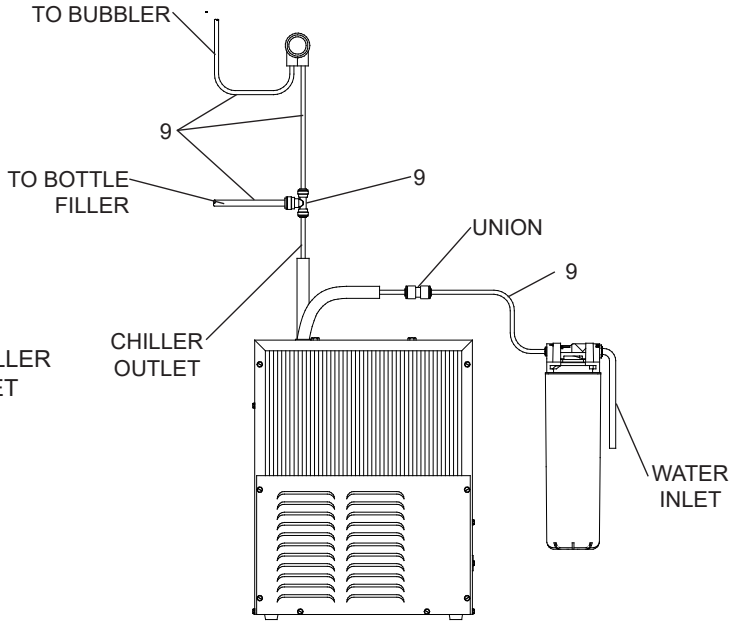


***Figure 6 – LZWS-ERPB Tube Routing***

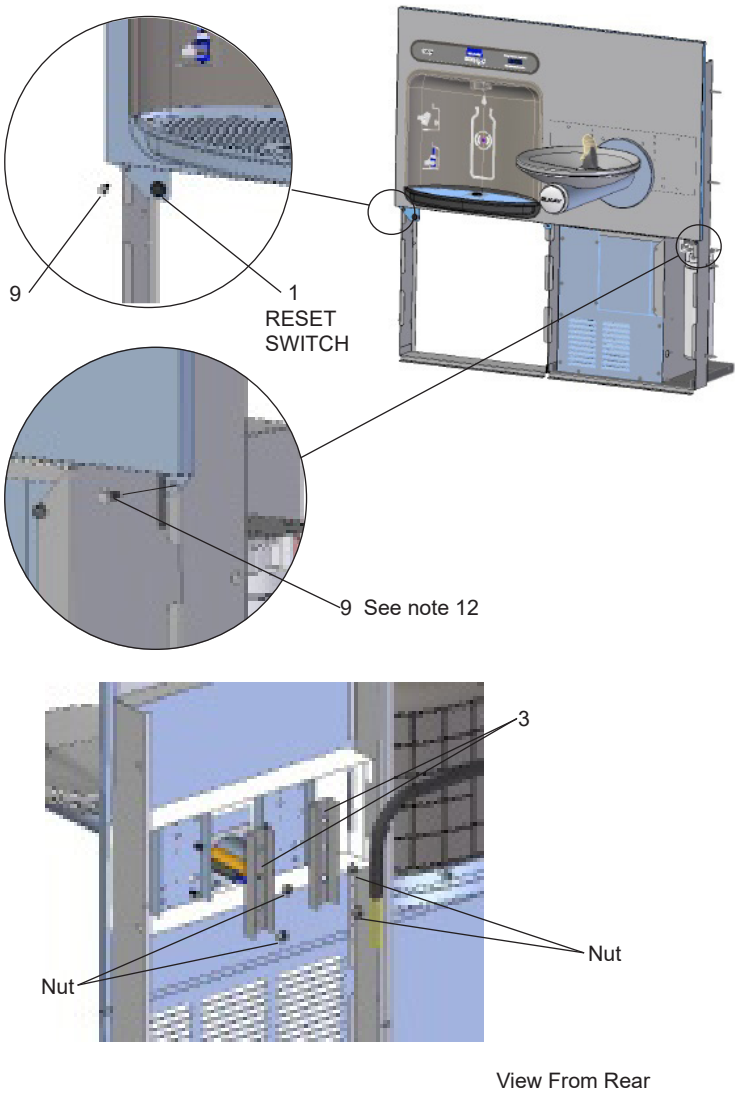


*Figure 7 – Fountain Installation*

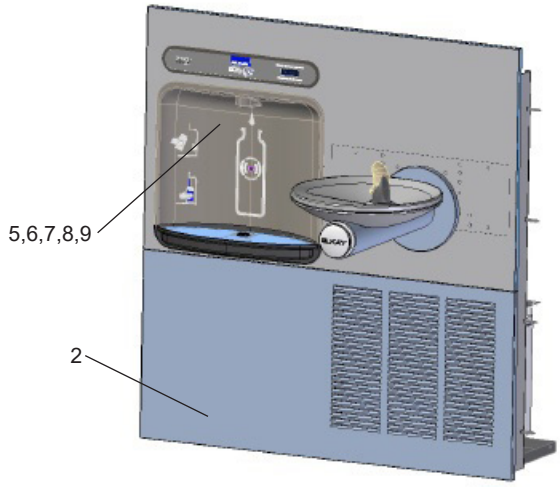


*Figure 8 – Lower Panel Installation*

10. **Install** fountains with (4) 5/16-18 HHMS, (4) 5/16-18 nuts & (2) support brackets (Item 3) (from original installation) (Fig. 7). Connect the ¼" water lines from the fountain to the remaining opening on the tee at the remote chiller (cut lines to fit as needed), (Test fit refrigerated panel to make sure there is a tight joint between it & the main panel before fully tightening mounting screws.)

11. **Attach** waste tubes (1-1/4" O.D.) to 1-1/4" O.D. slip trap. Trap on the bottle filler side must be 1-1/2" O.D. (Traps and connection fittings provided by others).

12. **Drill** a 5/32" (.156") diameter mounting hole in right hand frame to secure the lower right corner of the upper panel.

    - Center the hole in tab opening.
    - Secure the panel to the frame with (screw from kit Item 8).

13. **Make** final water supply connections. Turn on water supply, check for leaks. Repair leaks as required.

    - These products are designed to operate on 20-105 PSI supply line pressure. If inlet pressure is above 105 PSI, a pressure regulator must be installed in the supply line.

    - **(Caution: Any damage caused by connecting these products to a supply line with pressure lower than 20 PSI or higher than 105 PSI IS NOT covered under warranty.)**

14. **Make** electrical connections to the bottle filler and remote chiller. The LCD Bottle counter should illuminate. Refer to BF11 Program instructions for additional details on Bottle Filler setup.

15. **Verify** proper dispensing from the bottle filler by placing a cup, hand or any opaque object in front of sensor area and verify water dispenses. Note: the first initial dispenses might have air in the line which may cause a sputter. This will be eliminated once all air is purged from the line. A steady stream of water assures all air is removed. The sensor has a 20 second maximum ON time. It may be necessary to step away from the beam a few times to purge all air. Check for leaks.

16. **Reconfirm** the installation has no leaks. Install the lower (louver) panel.

**NOTE:** The following items are not used with the converted installation:

- One Fountain Assembly
- Wall Frame - Left Side
- Upper Panel
- Lower (Louver) Panel

# BF11 - BF12 PROGRAM
# SETTING THE CONTROL BOARD

## VERIFY CONTROL BOARD SOFTWARE

1) To verify the software program of the control board the unit will need to be shut down and restarted. The chiller (if present) does not need to be shut down and restarted.
2) Shut down the unit by unplugging the power cord from the wall outlet or switching off the circuit breaker to the unit.
3) Restart the unit by plugging the power cord back into the wall outlet or by switching on the circuit breaker to the unit.
4) Upon start up, the bottle count display will show the software designation of BF11 or BF12.

## ACCESSING THE PROGRAMMING BUTTON

1) To access the program button, remove the bottom lower louvered panel (Fig. 7) by removing the lower panel screws. Reset button is located on the mounting bracket.

## RESET THE FILTER MONITOR

1) Instructions apply to filtered units only.
2) Depress the program button for approximately 2 seconds until the display changes then release. The display will change and scroll through two messages:
   "RST FLTR" – Reset Filter Monitor
   "SETTINGS" – System Settings Sub Menu
   If the program button is not pushed again the display will scroll through the two messages above for three cycles and then default back to bottle count and be back in run mode.
3) When the display changes to "RST FLTR", depress the button again. The display will change to show "FLTR =". Depress the button again and the display will show "FLTR =0"
4) The Green LED should be illuminated indicating that the visual filter monitor has been reset.

## SETTING RANGE OF THE IR SENSOR WHERE APPLICABLE

1) Depress the program button for approximately 2 seconds until the display changes then release. The display will change and scroll through two messages:
   "RST FLTR" – Reset Filter Status LED
   "SETTINGS" – System Settings Sub Menu
   If the program button is not pushed again the display will scroll through the two messages above for three cycles and then default back to bottle count and be back in run mode.
2) When the display changes to "SETTINGS", depress the button again. The display will change to show
   "RNG SET" - Range set for IR sensor.
   "UNIT TYP" - Type of unit (REFRIG or NON-RFRG)
   "FLT SIZE" - Select filter capacity
   "RST BCNT" - Reset bottle count
3) When display shows "RNG SET" push program button once the display will show current value (can be 1 – 10) e.g. "RNG = 3".
4) Once display shows current value push the program button to scroll through value of 1 – 10. Select the desired range setting, "1" being closest to sensor and "10" being farthest away.
5) Once range is selected allow approximately 4 seconds to pass and then the display will go back to bottle counter and be in run mode.
6) Test bottle filler by placing bottle or hand in front of sensor to make sure water is dispensed.

## SETTING UNIT TYPE

1) Depress the program button for approximately 2 seconds until the display changes then release. The display will change and scroll through two messages:
   "RST FLTR" – Reset Filter Status LED
   "SETTINGS" – System Settings Sub Menu
   If the program button is not pushed again the display will scroll through the two messages above for three cycles and then default back to bottle count and be back in run mode.
2) When the display changes to "SETTINGS", depress the button again.
   The display will change to show
   "RNG SET" - Range set for IR sensor.
   "UNIT TYP" - Type of unit (REFRIG or NON-RFRG)
   "FLT SIZE" - Select filter capacity
   "RST BCNT" - Reset bottle count

Continued from below:

3) When display shows "UNIT TYPE" push program button once the display will show current value. Can be REFRIG or NON-RFRG
4) Push button once to change value. Once value is selected the display will show the new value. (Can be REFRIG or NON-RFRG)
   "REFRIG" - stands for refrigerated product. In this setting the flow rate is estimated at 1.0 gallon per minute.
   "NON-RFRG" - stands for nonrefrigerated product. In this setting the flow rate is estimated at 1.5 gallons per minute. Both "REFRIG" and "NON-RFRG" simulate 1 bottle equal to 20 oz.
5) Allow approximately 4 seconds to pass and the display will return to bottle counter and be in run mode.

## RESETTING BOTTLE COUNT

1) Depress the program button for approximately 2 seconds until the display changes then release. The display will change and scroll through two messages:
   "RST FLTR" – Reset Filter Status LED
   "SETTINGS" – System Settings Sub Menu
   If the program button is not pushed again the display will scroll through the two messages above for three cycles and then default back to bottle count and be back in run mode.
2) When the display changes to "SETTINGS", depress the button again. The display will change to show:
   "RNG SET"- Range set for IR sensor.
   "UNIT TYP" - Type of unit (REFRIG or NON-RFRG)
   "FLT SIZE" - Select filter capacity
   "RST BCNT" - Reset bottle count
   If the button is not pushed again the display will scroll through the four messages above for three cycles and return to run mode.
3) When display shows "RST BCNT" push program button once the display will show current value, e.g. "0033183".
4) Once display shows current value push the program button once more to reset back to 0. The display will show BTLCT = 0 for approximately 2 seconds and then return to run mode showing 00000000 bottles.
   **NOTE: Once the bottle count is reset to zero there is no way to return to the previous bottle count.**
5) Testing the bottle counter:
   REFRIG units: Place bottle or hand in front of sensor for approximately 9 seconds to see bottle counter count 00000001,
   (This is based on filling a 20 oz. bottle).
   NON-RFRG units: Place bottle or hand in front of sensor for approximately 6 seconds to see bottle counter count 00000001,
   (This is based on filling a 20 oz bottle).

## SETTING FILTER CAPACITY

1) Depress the program button for approximately 2 seconds until the display changes then release. The display will change and scroll through two messages:
   "RST FLTR" – Reset Filter Status LED
   "SETTINGS" – System Settings Sub Menu
   If the program button is not pushed again the display will scroll through the two messages above for three cycles and then default back to bottle count and be back in run mode.
2) When the display changes to "SETTINGS", depress the button again. The display will change to show:
   "RNG SET"- Range set for IR sensor.
   "UNIT TYP" - Type of unit (REFRIG or NON-RFRG)
   "FLT SIZE" - Select filter capacity
   "RST BCNT" - Reset bottle count
   If the button is not pushed again the display will scroll through the four messages above for three cycles and return to run mode.
3) When display shows "FLT SIZE" push program button once. The display will show current value. Can be 3000GAL or 6000GAL.
4) Push program button again to display the desired "FLT SIZE".
5) Allow approximately 4 seconds to pass and the display will return to bottle counter and be in run mode.

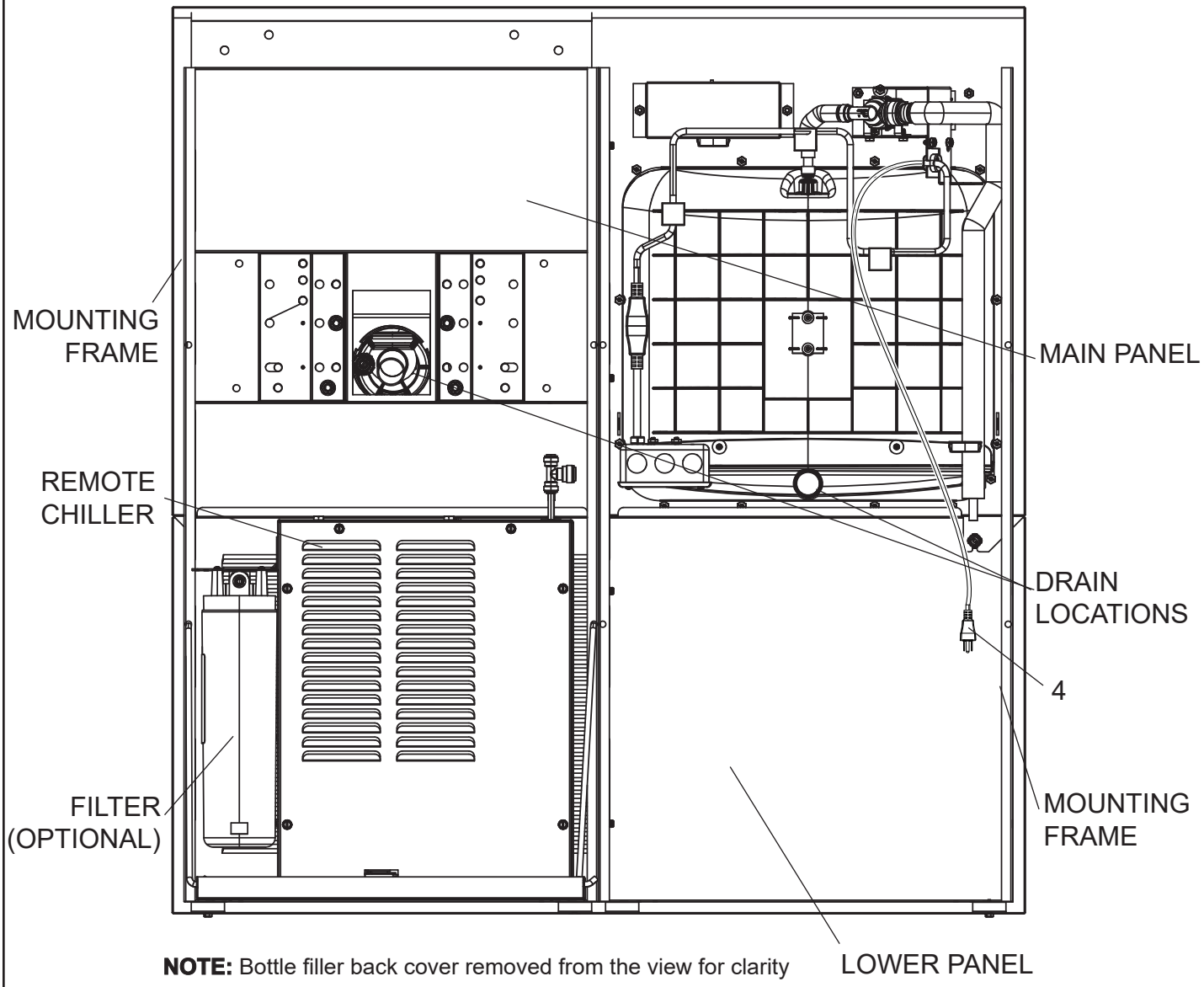


**NOTE:** Bottle filler back cover removed from the view for clarity

***Figure 9***

| PARTS LIST | | |
|---|---|---|
| ITEM NO. | PART NO. | DESCRIPTION |
| 1 | 99003C | Reset Switch Assy |
| 2 | 0000000711 | Lower Panel |
| 3 | 28395C | Bracket - Support |
| 4 | 1000005855 | Power Cord |

| BOTTLE FILLER REPLACEMENT PART KITS | | |
|---|---|---|
| ITEM NO. | PART NO. | DESCRIPTION |
| 5 | 98543C | Kit - Electrical Package |
| 6 | 98544C | Kit - EE Sensor |
| 7 | 2000000503 | Kit - Bottle Filler Solenoid Valve 115V |
| 8 | 98546C | Kit - Aerator Replacement |
| 9 | 98549C | Kit - Hardware & Waterway Parts |

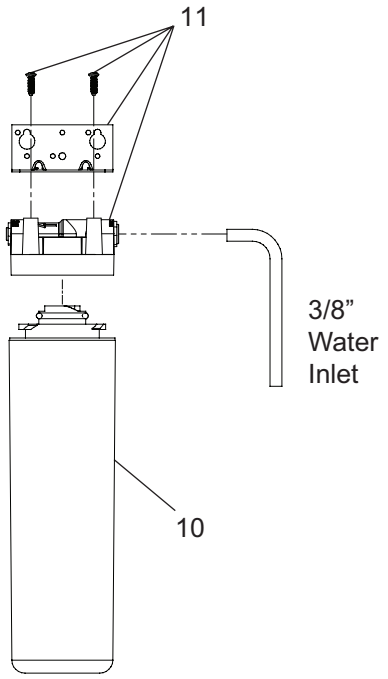


**Filter Head Assembly used after 01/01/2021**

***Figure 10***

| WATERSENTRY® PLUS FILTER PARTS LIST (See Fig. 10) | | |
|---|---|---|
| ITEM NO. | PART NO. | DESCRIPTION |
| 10 | 51300C | Filter Assy-30000 Gal. |
| 11 | 51469C | Assy-Filter & Brkt includes Fltr Head/ Mtg Brkt/John Guest Fittings/Screws |

## TROUBLESHOOTING & MAINTENANCE

**Orifice Assembly: Mineral deposits on orifice can cause water flow to spurt or not regulate. Mineral deposits may be removed from the orifice by poking with a small round file not over 1/8” diameter, or using a small diameter wire.**

**CAUTION: DO NOT** file or cut orifice material.

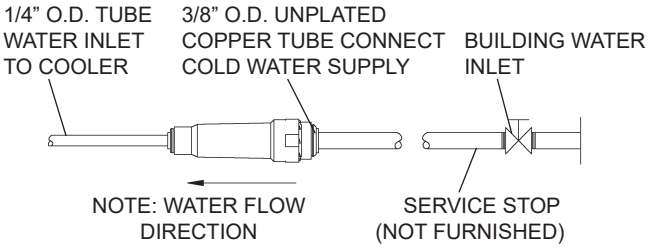


***Figure 11 – Water Supply Connections***

**Actuation of Quick Connect Water Fittings:** Cooler is provided with lead-free connectors which utilize an o-ring water seal. To remove tubing from the fitting, relieve water pressure, push in on the gray collar while pulling on the tubing. (See Figure 12) To insert tubing, push tube straight into fitting until it reaches a positive stop (approximately 3/4”).

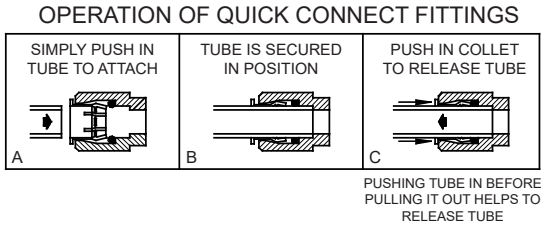


***Figure 12 – Filter Quick Connect Fittings***

Scan for troubleshooting information and to subscribe to automatic filter replacements at a discount.

2000000500

**Patent zurnelkay.com/patents**

**PRINTED IN U.S.A.**

FOR PARTS, CONTACT YOUR LOCAL DISTRIBUTOR OR CALL 1.800.834.4816
REPAIR SERVICE INFORMATION TOLL FREE NUMBER 1.800.260.6640

**ELKAY MANUFACTURING COMPANY • 1333 BUTTERFIELD ROAD SUITE 200 DOWNERS GROVE, IL 60515 • 630.574.8484 • www.elkay.com**