JEEVES MODEL A LADDER
TECHNICAL DRAWING

ASP	ASB	ASO*	ASW*	ASMB*
POLISHED	BRUSHED	OIL-RUBBED BRONZE	WHITE	MATTE BLACK

FRONT VIEW OF RACK ON WALL

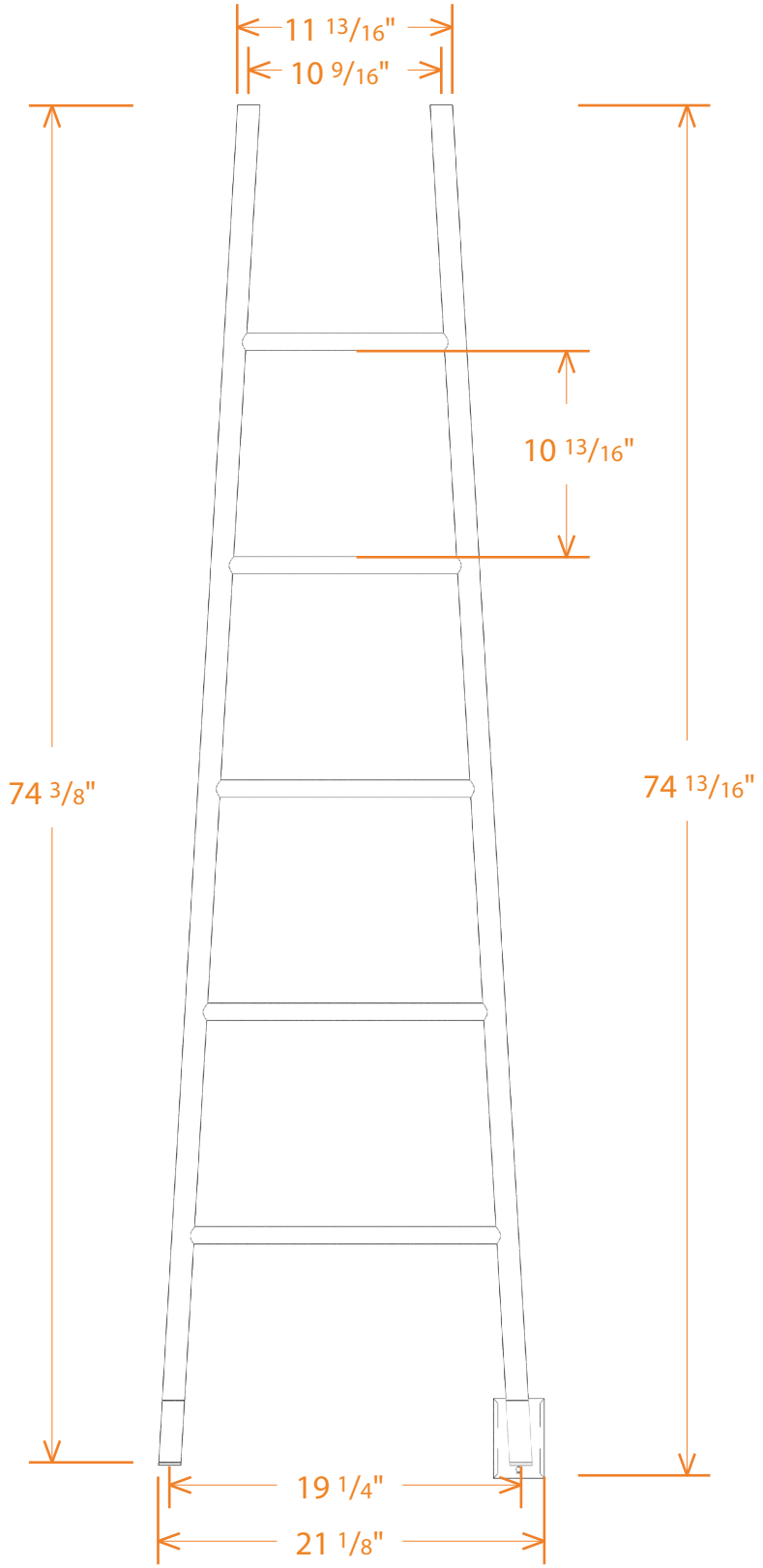

SIDE VIEW

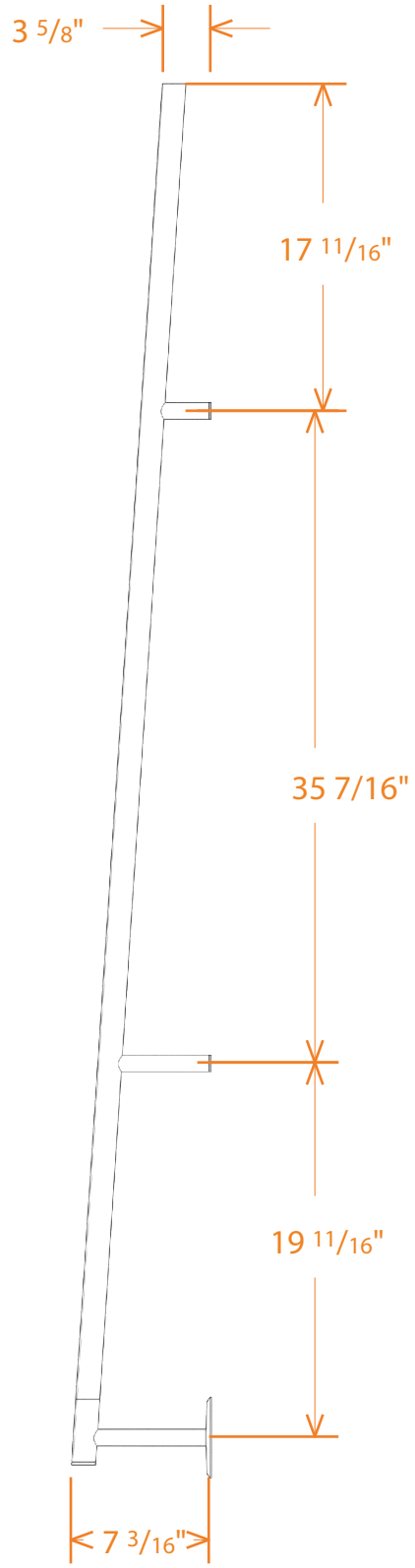

Amba HEATED TOWEL RACKS
www.ambaproducts.com

VOLTS: 110v
WATTS: 135-150*
AMPS: 1.25-1.36*