ELKAY® With FLEXI-GUARD®

INSTALLATION & USE MANUAL

SWIRLFLO® Refrigerated fountains with FLEXI-GUARD®

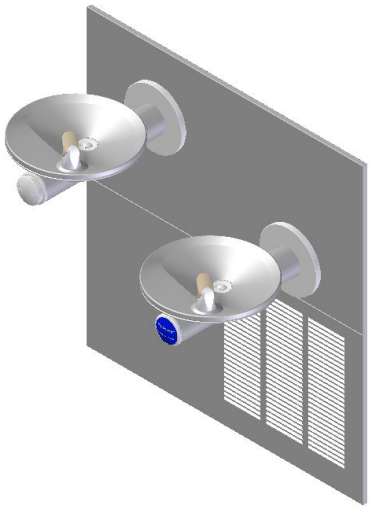

ENOB2-8C

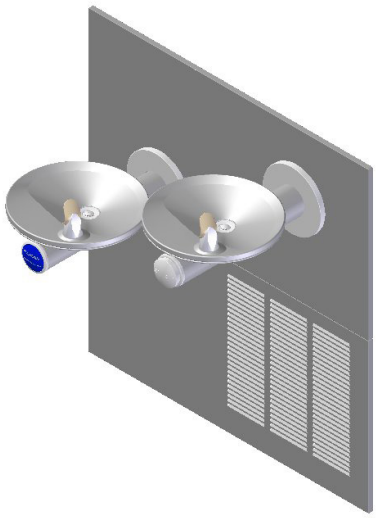

ENOB2-8RAC

INSTALLER

CAUTION: Review these instructions before beginning installation. Be sure that installation conforms to all plumbing, electrical and other applicable codes.

WARNING: When installation is complete, ensure these instructions are left with building owner for future reference.

WARNING: Service to be performed by authorized service personnel only.

NOTE: It is common practice to ground electrical hardware such as telephones, computers and other devices to available water lines. This can, however, cause electrical feedback in the plumbing circuit, which results in an “electrolysis” effect occurring in the fountain. This may result in water which has a metallic taste to it or has a noticeable increase in the metallic content of the water.

When inspecting plumbing circuit, remember the line may be grounded some distance from the installation, and may occur outside the building or area in which the unit is being installed.

This condition can be avoided (in most cases) by using recommended materials during installation. Any drain fittings provided by the installer should be made of ***plastic*** which will *electronically isolate* the fountain from the remainder of the building’s plumbing circuits.

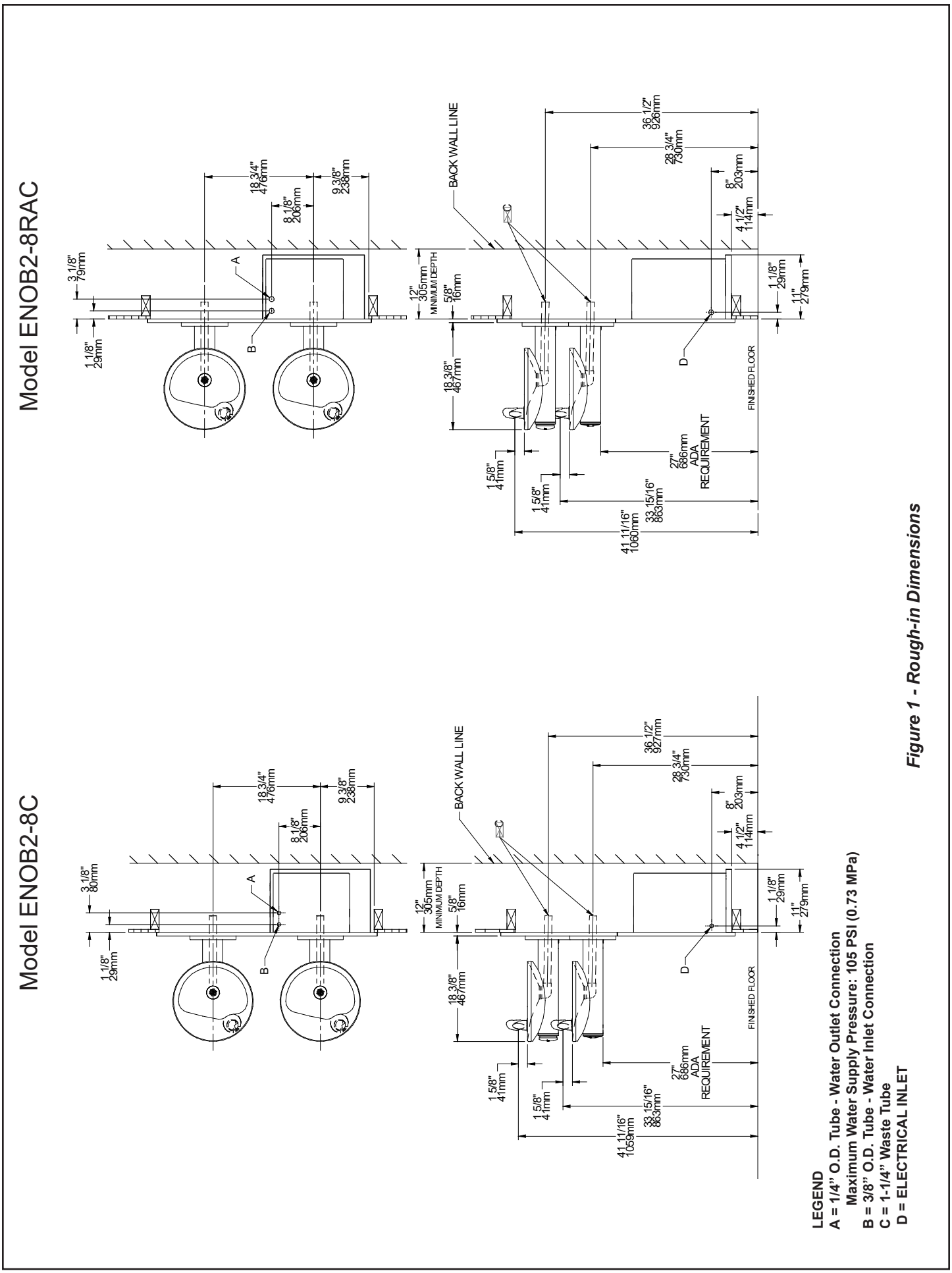

LEGEND
A = 1/4" O.D. Tube - Water Outlet Connection
Maximum Water Supply Pressure: 105 PSI (0.73 MPa)
B = 3/8" O.D. Tube - Water Inlet Connection
C = 1-1/4" Waste Tube
D = ELECTRICAL INLET

Figure 1 - Rough-in Dimensions

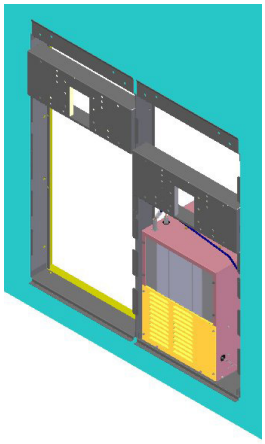

Figure 2 - Chiller Installation

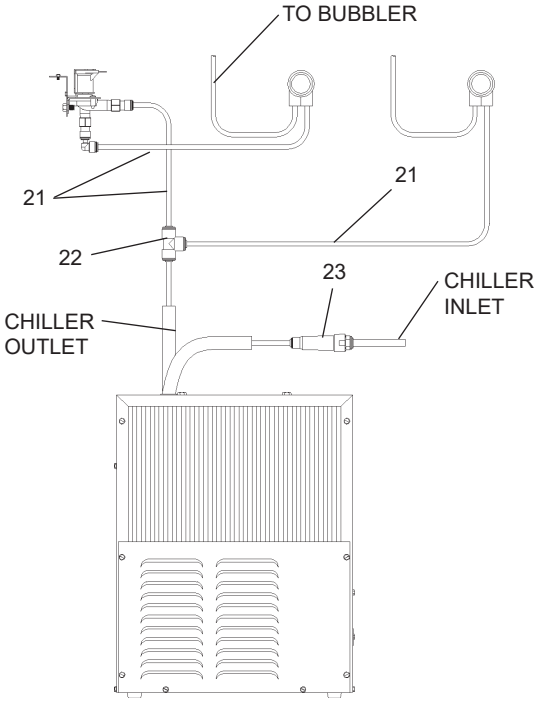

Figure 3 - ENO Tube Routing

REQUIRED TOOLS AND MATERIALS

These tables show special tools and/or additional materials (not provided) which are necessary to complete installation of these units:

Special Tools

Item	Description	Quantity
	NONE	

Additional Materials

Item	Description	Quantity
1	Unplated copper inlet pipe	
2	Service Stop	

1. **Install chiller:** Remove front panel of chiller. Slide chiller onto the shelf and position it to the left as per dimensions in Figure 1.

   Note: Building construction must allow for adequate air flow on both sides, top and back of chiller. A minimum of 4" (102mm) on both sides and top is required. See chiller installation for additional instructions.

2. **Attach solenoid valve assembly to the underside of cross member of mounting frame on electronic sensor unit.** (See Fig. 7).

3. **Make water supply connections.** Inlet port is marked on the chiller (1/4" O.D. copper tube). Bend the copper tube (provided) at an appropriate length from the chiller to opening in frame. Install the in-line strainer (provided with chiller) by pushing it in until it reaches a positive stop, approximately 3/4" (19mm) on the marked chiller inlet port (See Figs. 3) (Refer to Fig. 13 on page 7 for details on assembling quick connect fittings). Attach an unplated and deburred copper water inlet line and a service stop (not provided) to the chiller. Turn on the water supply and flush the line thoroughly.

   Caution: DO NOT SOLDER tubes inserted into the strainer as damage to o-rings may result.

4. **Make connection between remote chiller outlet tube and solenoid valve assembly.** Outlet port is marked on the chiller (1/4" O.D. copper tube). Install a 1/4" tee (provided) on the marked chiller outlet port. Insert one end of 1/4" poly tubing into the tee and the other end into the straight fitting on the solenoid valve assy. (See Fig. 3)

5. **Hang** the upper panel on the mounting frame hanger. Be sure that the panel is engaged with hanger at the top of frame before releasing it. Align holes in the panel with holes in the mounting frame. Install two (2) #10-24 x 5/8" (16mm) screws (Item 27 - Figure 4) in holes and tighten securely.

6. **Install** the fountain. Remove the screw (Item 28) from cover plate (Item 12) and slide cover plate toward basin. Mount the fountain to the upper panel and frame with (4) 5/16" x 1" (25mm) long bolts (Item 30), bracket (Item 33) and nuts (Item 32) provided. Tighten securely. **Brackets (Item 33) must be installed as shown to properly support fountain.** (See Fig. 5)

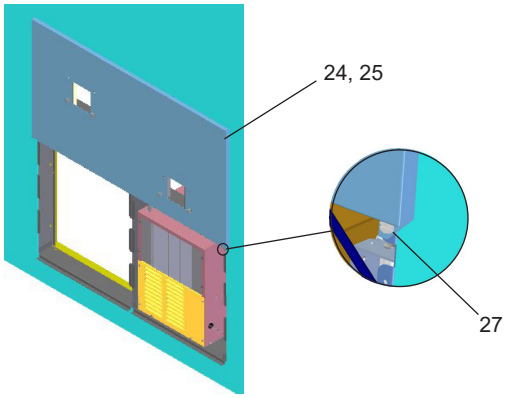

Figure 4 - Upper Panel Installation

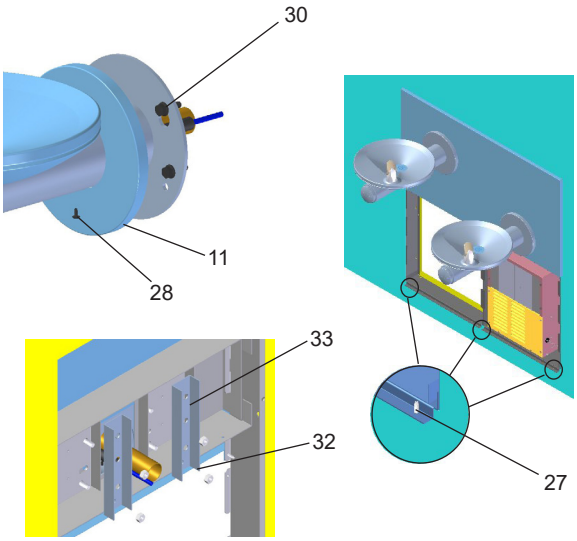

Figure 5 - Fountain Installation

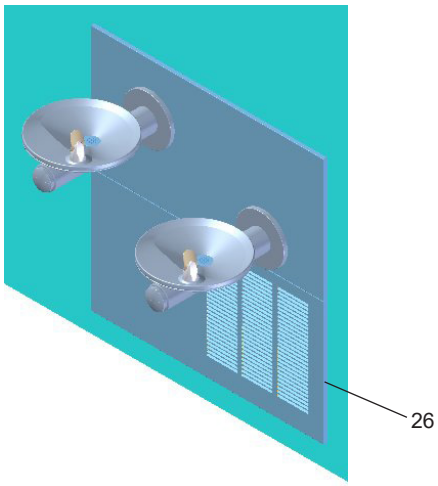

Figure 6 - Lower Panel Installation

7. **Attach waste tube** (1-1/4" O.D.) to 1-1/4" O.D. slip trap (provided by others).

8. **Connect the fountain drain waste tube to the building sanitary sewer system.** Connection should be made in compliance with local plumbing code requirements. (Note: Plumbing trap is not included with the fountain).

9. **Make connection between solenoid valve assembly and fountain(s).** Insert the 1/4" poly tubing coming from the fountain with sensor into the solenoid valve. Insert the 1/4" poly tubing coming from the fountain with push button into the tee (See Fig. 3).

10. **Connect power cord of sensor to solenoid valve assembly by running it through the back panel and connecting it to terminal as shown in Fig. 8.**

11. **Turn on water supply and check for leaks.** Release air from tank by interrupting infrared beam; a steady stream of water assures all air is removed. The sensor has a 30 second maximum **ON** time. It may be necessary to step away from beam a few times to allow chiller tank to fill.

CAUTION: DO NOT SOLDER **tubes while inserted into the strainer as damage to o-rings may result.**

12. **These products are designed to operate on 20-105 PSI supply line pressure.** If inlet pressure is above 105 PSI, a pressure regulator must be installed in the supply line.

CAUTION: Any damage caused byconnecting these products to a supply line with pressure lower than 20 PSI or higher than 105 PSI IS NOT covered under warranty.

13. **Make electrical connections to the chiller.** See chiller instructions.

14. **Check stream height from bubbler.** Stream height is factory set at 35-40 PSI. If supply pressure varies greatly from this, please do the following. For **Push Button units only**, remove push button (Item 14 - Figure 12) and adjust the screw on the regulator (Item 15 - Figure 12). To remove push button, remove set screw from bottom of sleeve (Item 31). Insert a small punch in screw hole and push up while grasping the push button and pull forward removing the push button. Clockwise adjustment will raise stream height and counterclockwise movement will lower stream height. For best adjustment stream should hit basin approximately 6-1/2" from the bubbler. Reassemble push button by pushing in on button until the push button catches in the sleeve. Reinstall the set screw (Item 31) in the sleeve (Item 12).
For **Electronic sensor units only**, remove lower panel (Item 26 - Fig. 4) and turn adjustment screw on the regulator (Item 16 - Fig. 8). Clockwise adjustment will raise stream height and counterclockwise movement will lower stream height. For best adjustment stream should hit basin approximately 6-1/2" from the bubbler.

15. **Mount lower panel.** Loosen the three (3) #10-24 x 5/8" (16mm) screws (Item 27 - Figure 5) at frame bottom lip. Slide upper tongue of lower panel (Item 26 - Figure 6) under lower edge of already installed upper panel. Tighten previously loosened screws securely. (See Figure 6)

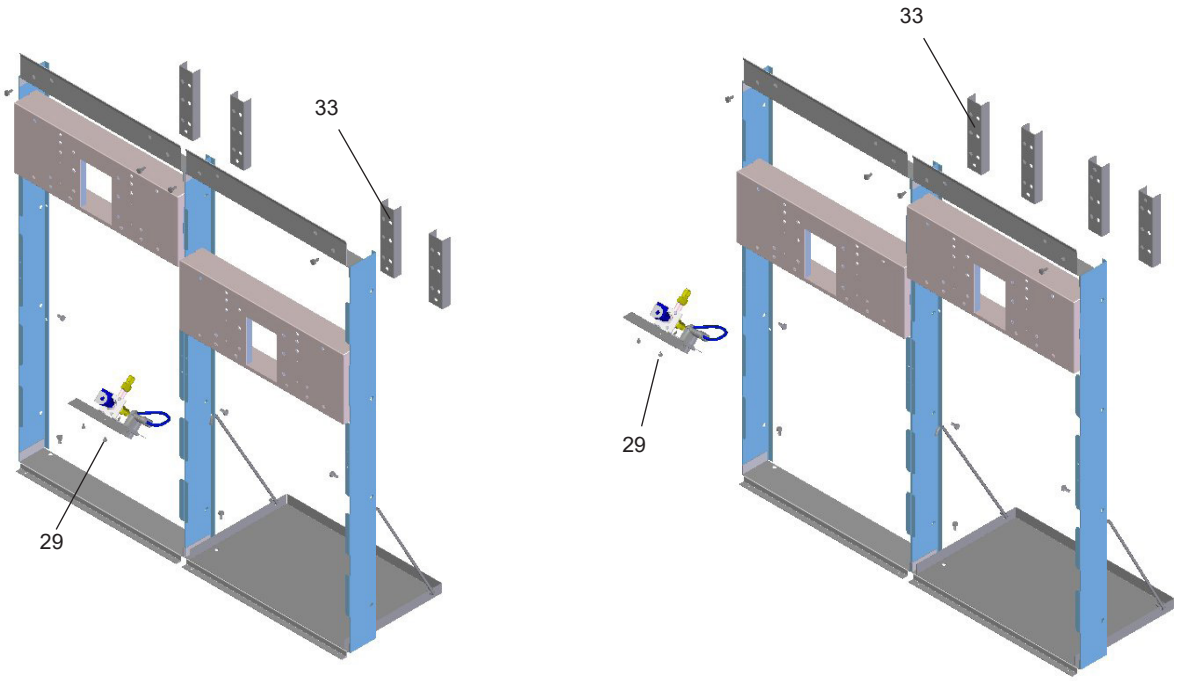

ENOB2-8C ***ENOB2-8RAC***

Figure 7 - Solenoid Assembly

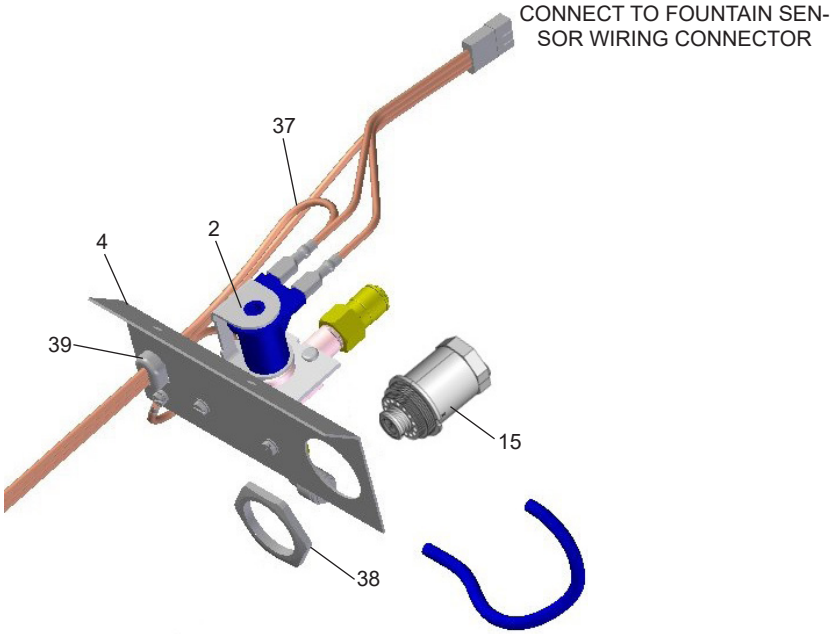

Figure 8 - Regulator Assembly (Item 7)

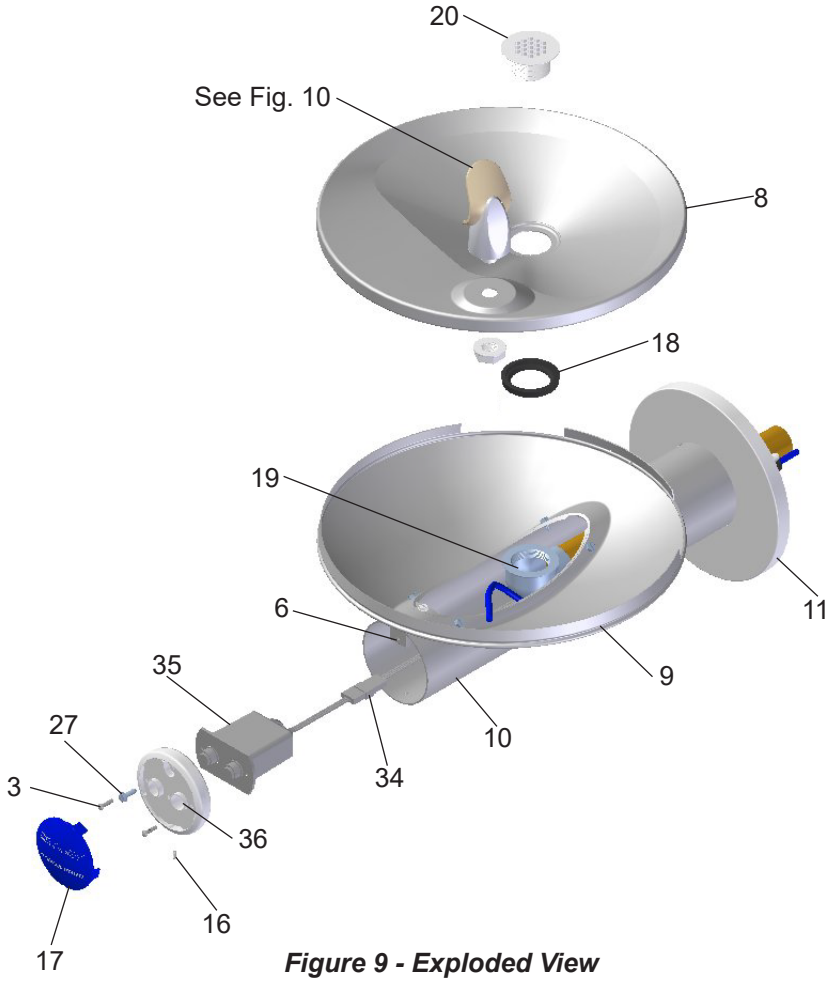

Figure 9 - Exploded View

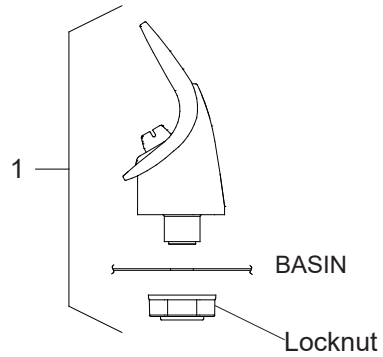

NOTE: WHEN INSTALLING REPLACEMENT BUBBLER AND PEDESTAL, TIGHTEN LOCKNUT ONLY TO HOLD PARTS SNUG IN POSITION. DO NOT OVER TIGHTEN.

Figure 10 - Bubbler Assembly

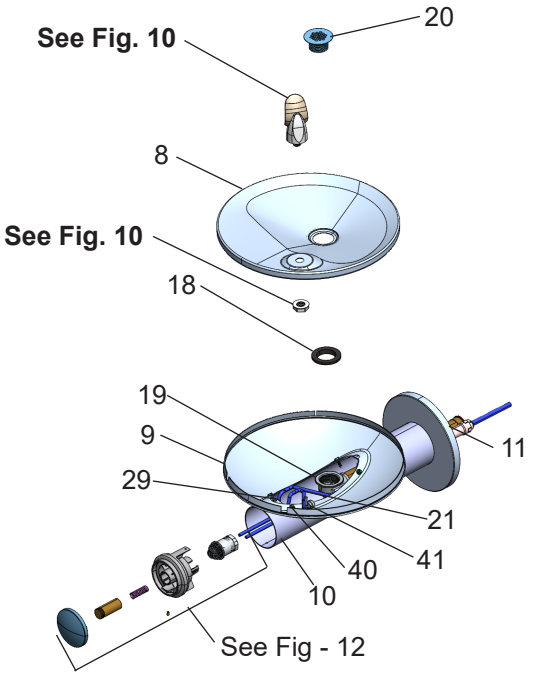

Figure 11 - Fountain Body Assembly

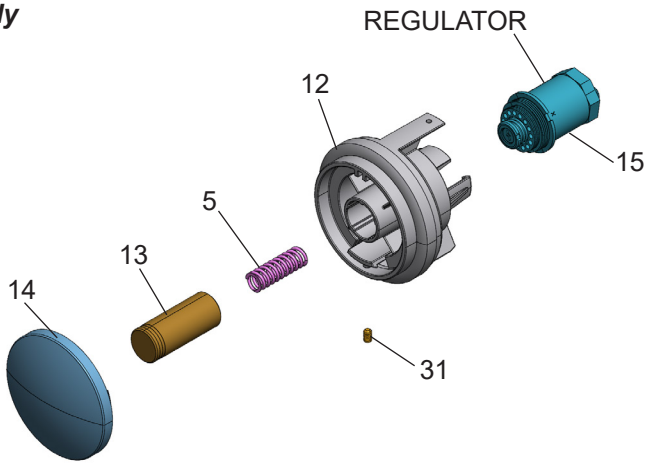

Figure 12 - Push Button Assembly

Actuation of Quick Connect Water Fittings: Cooler is provided with lead-free connectors which utilize an o-ring water seal. To remove tubing from the fitting, relieve water pressure, push in on the gray collar while pulling on the tubing. (See Figure 13) To insert tubing, push tube straight into fitting until it reaches a positive stop (approximately 3/4”).

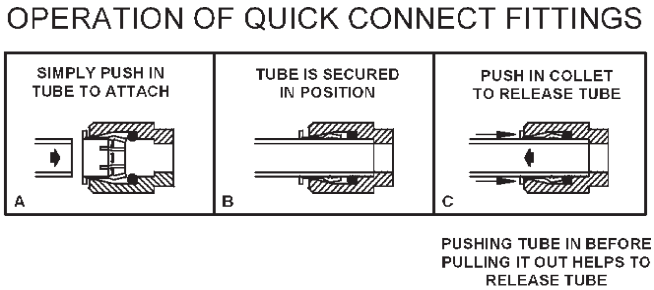

Figure 13 – Quick Connect Fittings

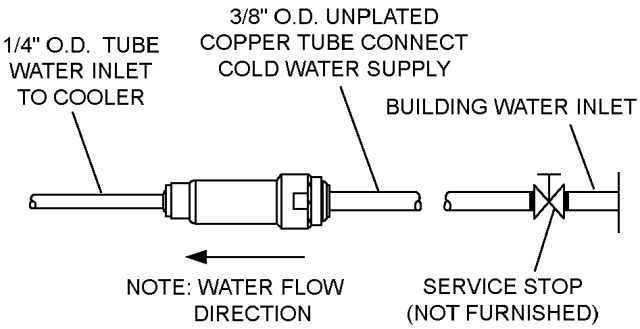

Figure 14 – Water Supply Connections

PARTS LIST

ITEM NO.	PART NO.	DESCRIPTION
1	56073C	Bubbler Assy
2	98016C	Kit - Solenoid replacement/Elbow/Fttng
3	70644C	Screw - #6-32 x .50 PHMS
4	28454C	Brkt -Solenoid/Reg Swirlflo
5	75671C	Spring - Push Button
6	15027C	Brkt - Swirlflow
7	28455C	Assy - Brkt Solenoid/Reg/Wire/P.Cord
8	28708C	Basin - Swirlflow
9	28473C	Lower Shell
10	45767C	Fountain Body
11	28343C	Cover Plate
12	45781C	Sleeve
13	45847C	Pin - Push Button
14	45848C	Push Button
15	2000002461	Kit - Regulator Swirflo
16	70022C	Screw - #6-32 x .31 Set
17	56204C	Lens - Swirlflow EE
18	56163C	Gasket - Drain
19	0000000930	Assy - Drain/Tailpipe
20	45768C	Drain - Ferrule
21	56092C	Poly Tubing (Cut To Length)
22	1000001994	Kit - 70862C Tee - 1/4 (3 Pack)
23	55996C	Strainer (Provided with Chiller)
24	28383C	Back Panel RH ADA
25	28384C	Back Panel LH ADA
26	27026C	Lower Panel
27	111008343890	Screw - #10-24 x .62 HHSM
28	70432C	Screw - #8-32 x .38 THSM
29	38417001	Screw - #8-18 x .37 HHSM
30	75560C	Screw - 5/16-18 x 1.00 HHMS
31	75632C	Setscrew - #10-32 x .31
32	70020C	Nut - Hex 5/16-18
33	28395C	Bracket - Support
34	36207C	Wire - Extension
35	36193C	Assy - Sensor Eye
36	45813C	Sleeve - Swirlflow EE
37	31376C	Cord - Power 115v
38	40045C	Nut - Hex 1 5/16
39	50203C	Bushing - Strain Relief
40	70288C	Screw - #10X.37 HHSMKit - 70187C
41	1000001772	Kit - 70817C Elbow 1/4 x 1/4 (3 pack)

Installation Package

The components for installation are packed in three separate boxes, regardless of the type of unit being installed. The boxes contain the following:

Box No. 1: Wall Frame(s)
Box No. 2: Remote Chiller, ECH8
Box No. 3: Fountain Arm and Panels

Additional materials, as noted in the Parts List, are also shipped in these boxes.

TROUBLE SHOOTING AND MAINTENANCE

1. **Orifice Assy:** Minerals deposits on orifice can cause water flow to spurt or not regulate. Mineral deposits may be removed from the orifice with a small round file not over 1/8" diameter or a small diameter wire. **CAUTION:** Do not file or cut orifice materials.
2. **Stream Regulator:** If orifice is free of material deposits regulate water flow according to instructions on page 4.
3. **Sensor Control:** The sensor has a 2 second delay time. If sensor fails to operate valve mechanism or operates erratically, check the following:
   a) Ensure there are no obstructions within a 40 inch radius from the front of fountain.
   b) Check wire connections at the solenoid valve and at the sensor. **CAUTION:** Make sure unit is unplugged before checking any wiring.
   c) Ensure proper operation of solenoid valve. If there is an audible clicking sound yet no water flows, look for an obstruction in the valve itself or elsewhere in the water supply line. **WARNING:** Do not expose sensor to direct sunlight.
4. **Sensor Range Adjustment:** The electronic sensor used in this fountain is factory pre-set for a "visual" range of 36 inches. If actual range varies greatly from this, or a different setting is desired, follow the range adjustment procedure below:
   a) Remove front lens.
   b) Locate range adjustment screw between the lenses of the sensor, then with a small tip screwdriver, rotate the range adjusting screw clockwise to increase range or counter-clockwise to decrease range. 1/4 turn of screw is equal to approximately 12 - 18 inches of range. **CAUTION:** Complete range of sensor (24 - 46 inches) is only one turn of the adjusting screw.
   c) Replace lens.

CARE AND CLEANING INSTRUCTIONS

DO NOT use abrasive or chemical cleaners to clean the sensor lens. They may dull the luster and attack the plastic cover and chrome finish of the fountain. Use **ONLY** soap and water, then wipe with clean cloth or towel. When cleaning adjacent surfaces, the fountain and the sensor lens should be protected from any splattering of cleaners. Acid and cleaning fluids can discolor and damage chrome plating and plastic sensor lens.

98005C

Patent zurnelkay.com/patents

PRINTED IN U.S.A.

FOR PARTS, CONTACT YOUR LOCAL DISTRIBUTOR OR CALL 1.800.834.4816
REPAIR SERVICE INFORMATION TOLL FREE NUMBER 1.800.260.6640

ELKAY MANUFACTURING CO. • 1333 BUTTERFIELD ROAD SUITE 200 • DOWNERS GROVE • IL 60515 • USA 630.574.8484 • www.elkay.com