ELKAY®

GreenSpec® LISTED
www.GreenSpec.com

INSTALLATION and USE MANUAL

Models (L)VRC8WS, (L)VRC8WSJO Factory Prep ezH2O® Bottle Filling Station and Cooler

Model LVRC8WS

TOOLS REQUIRED

BUT NOT PROVIDED:

SAFETY GLASSES
GLOVES
ELECTRIC DRILL
3/4” WRENCH OR CRESCENT WRENCH
UTILITY KNIFE
TAPE MEASURE
PENCIL
CENTER PUNCH
1/2” SOCKET & RATCHET WRENCH
5/32” ALLEN WRENCH

IMPORTANT! INSTALLER PLEASE NOTE

THE GROUNDING OF ELECTRICAL EQUIPMENT SUCH AS TELEPHONE, COMPUTERS, ETC. TO WATER LINES IS A COMMON PROCEDURE. THIS GROUNDING MAY BE IN THE BUILDING OR MAY OCCUR AWAY FROM THE BUILDING. THIS GROUNDING CAN CAUSE ELECTRICAL FEEDBACK INTO A FOUNTAIN, CREATING AN ELECTROLYSIS WHICH CAUSES A METALLIC TASTE OR AN INCREASE IN THE METAL CONTENT OF THE WATER. THIS CONDITION IS AVOIDABLE BY USING THE PROPER MATERIALS AS INDICATED. ANY DRAIN FITTINGS PROVIDED BY THE INSTALLER SHOULD BE MADE OF PLASTIC TO ELECTRICALLY ISOLATE THE FOUNTAIN FROM THE BUILDING PLUMBING SYSTEM. WE SUGGEST THAT THE BOTTLE FILLING STATION AND WATER COOLER BE PROTECTED BY A GROUND FAULT CIRCUIT INTERRUPTER (GFCI).

(L)VRC8WS Bottle Fillers are among the easiest to install on the market today. To insure you install these models easily and correctly, PLEASE READ THESE SIMPLE INSTRUCTIONS BEFORE STARTING THE INSTALLATION. CHECK YOUR INSTALLATION FOR COMPLIANCE WITH PLUMBING, ELECTRICAL, AND OTHER APPLICABLE CODES. After installation, leave these instructions with the Fountain for future reference.

Note: Danger! Electric shock hazard. Disconnect power before servicing unit.
Pictured is unit only without Bottle Filler

Uses HFC-134A refrigerant

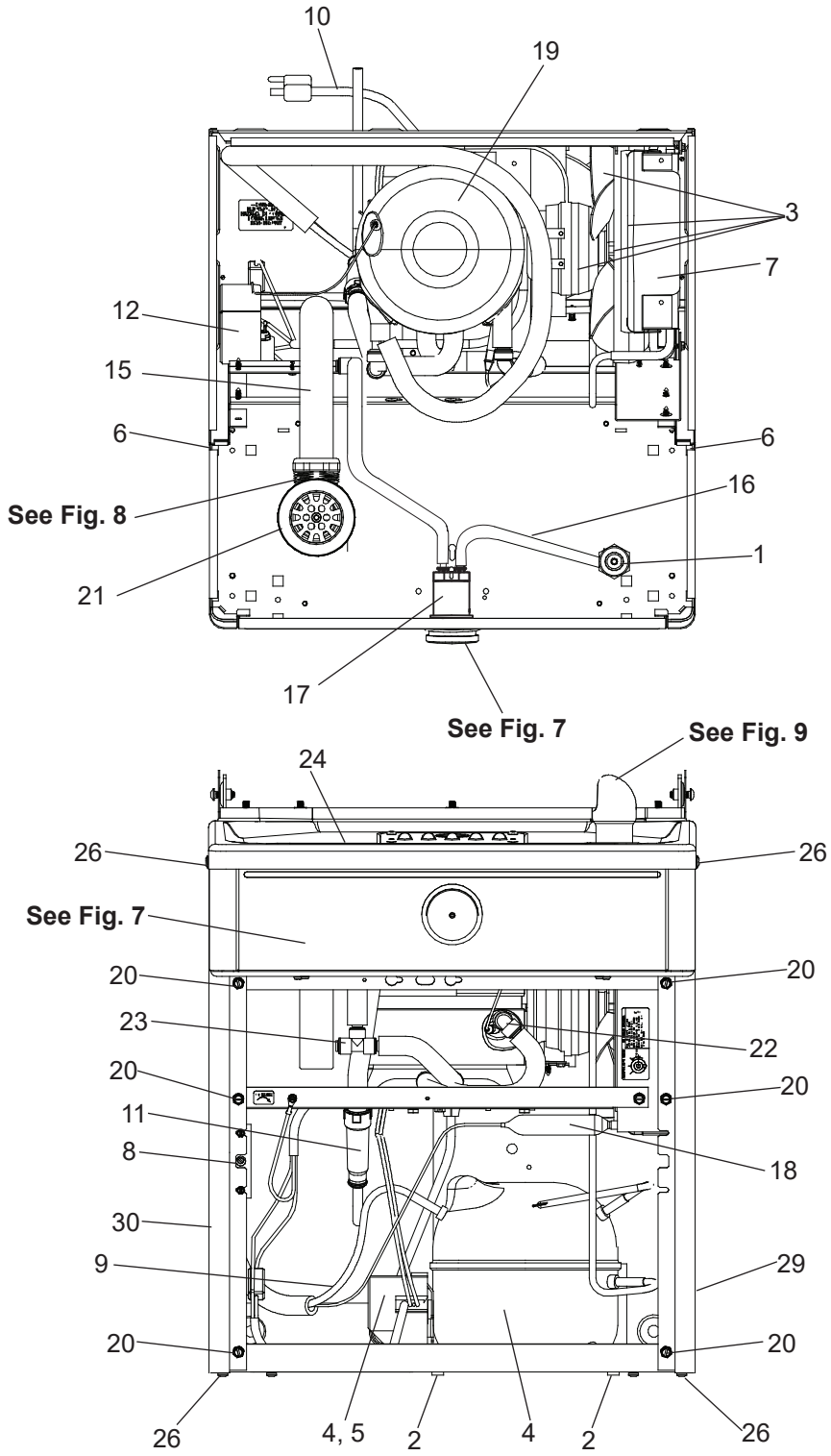

Fig. 1

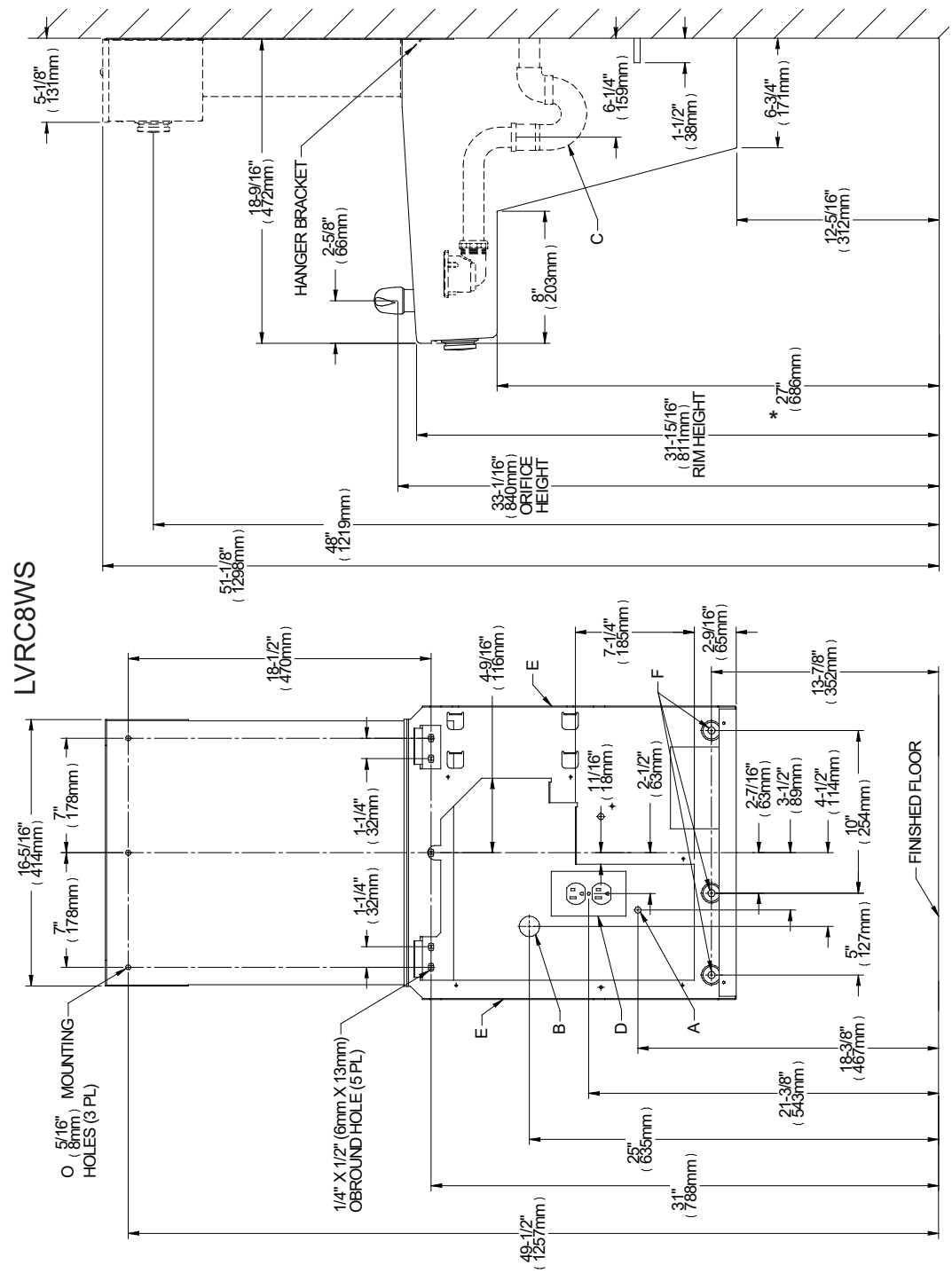

* ADA REQUIREMENT

* *REDUCE HEIGHT BY 3" FOR INSTALLATION OF CHILDREN'S ADA COOLER*

LEGEND:

A = RECOMMENDED WATER SUPPLY LOCATION 3/8" O.D. UNPLATED COPPER TUBE CONNECT STUB 1-1/2" (38mm) OUT FROM WALL. SHUT OFF VALVE NOT FURNISHED. MAXIMUM OUT FROM WALL, MAXIMUM WATER SUPPLY PRESSURE: 105 PSI (0.73 MPa).

B = RECOMMENDED LOCATION FOR WASTE OUTLET 1-1/4" O.D. DRAIN.

C = 1-1/4" TRAP NOT FURNISHED.

D = ELECTRICAL SUPPLY (3) WIRE RECESSED BOX, DUPLEX OUTLET REQUIRED.

E = INSURE PROPER VENTILATION BY MAINTAINING 6" (152mm) MIN. CLEARANCE FROM CABINET LOUVER TO WALL.

F = 7/16" BOLT HOLES FOR FASTENING UNITS TO WALL.

NOTE: IT IS HIGHLY RECOMMENDED TAHT THE CIRCUIT BE DEDICATED AND THE LOAD PROTECTION BE SIZED FOR 20AMPS AND UTILIZE HOSPITAL-GRADE GFCI.

Fig. 2

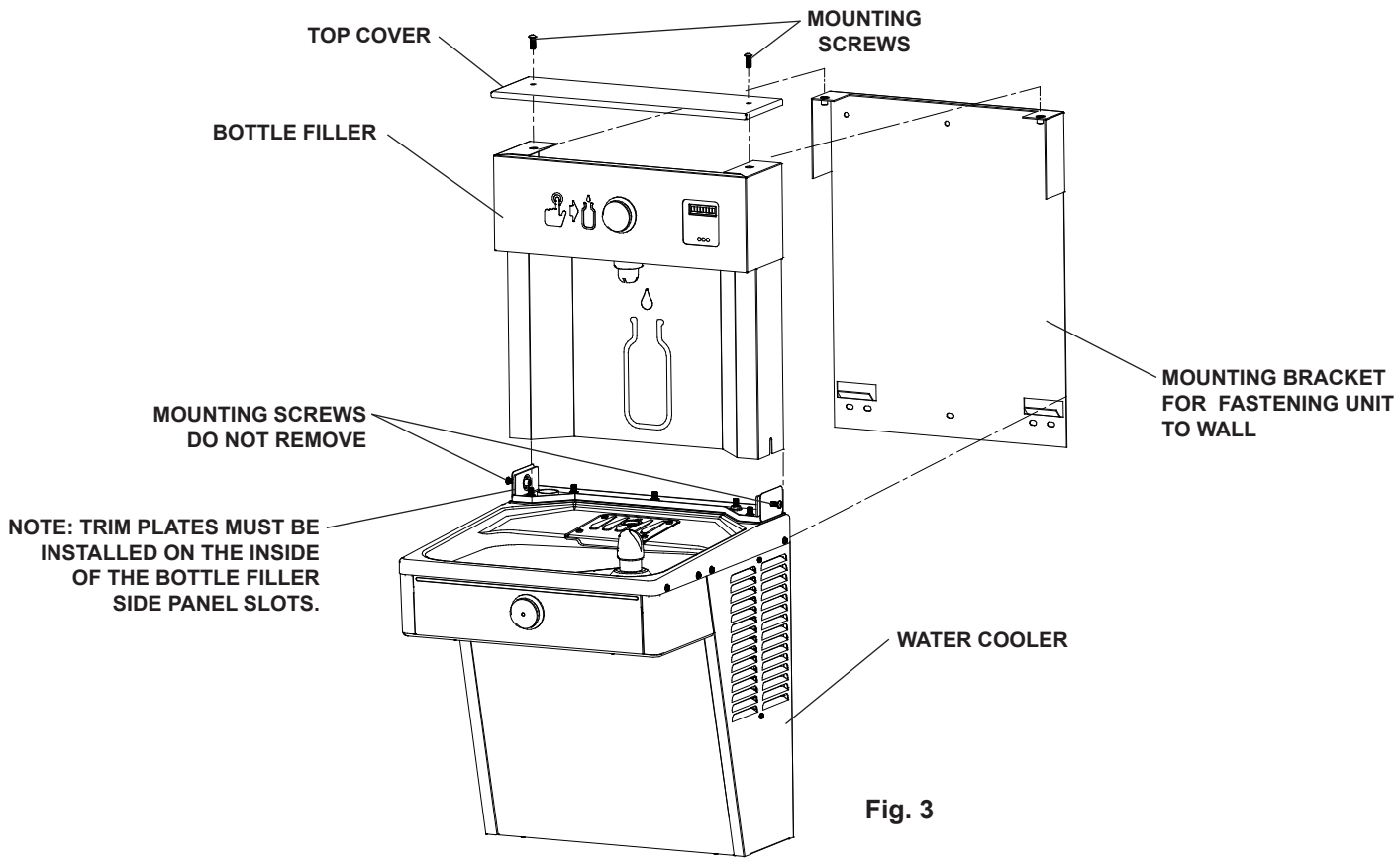

Fig. 3

BOTTLE FILLER INSTALLATION
(NON-FILTERED MODEL VRC AND FILTERED MODEL LVRC)

1) **Remove wall mounting plate** from Cooler. Install Wall Mounting Plate as per rough-in diagram (See rough-in on page 4).
   NOTE: Mounting plate **MUST** be supported securely. Add fixture support carrier if wall will not provide adequate support.
2) **Install water cooler onto wall bracket** and secure to wall. Connect drain and water inlet to cooler as required (See rough-in on page 4).
   DO NOT connect power to cooler at this time or turn water supply on.
3) **Remove (L)VRC Bottle Filler** from carton. Lay Bottle Filler on water cooler basin and cut insulation from tube even with bottom of unit, remove this insulation from the 3/8" tube, but do not discard. Feed the power cord and waterline through the hole on top of water cooler.
   NOTE: To prevent scratching the basin place a towel or soft cloth over the entire basin when working above it.
4) **With the power cord and waterline** through the hole on top of water cooler, place Bottle Filler onto mounting bracket on basin. (See Fig. 3). Make sure Bottle Filler is installed properly on the basin gasket.
5) **Once Bottle Filler** is installed on basin mounting bracket, tighten the two screws (supplied) one on each side of the Bottle Filler. Install Top Cover on Bottle Filler (See Fig. 3) with two mounting screws (supplied). Caution do not over tighten screws.
6) **Install remaining tube insulation to the waterline** from Bottle Filler. Connect Bottle Filler waterline inside of the water cooler by connecting the 3/8" water line to the tee.
7) **For Model LVRC cooler install filter cartridge:** Remove filter from carton. Remove protective cap and attach filter to filter head by firmly inserting into head and rotating filter clockwise.
   NOTE: If the existing plumbing rough-in locations (Drain, Water In, Electric Supply) do not allow the filter to be mounted inside the cooler cabinet, the filter can be installed horizontally below the unit. A retrofit kit is available to mount the filter beneath the cooler.
8) **Turn water supply on** and inspect for leaks. Fix all leaks before continuing.
9) **Once unit has been inspected** for leaks and if any leaks that are found are corrected, plug Bottle Filler and (L)VRC unit into wall. Be sure to reinstall fuse to the circuit or switch the circuit breaker back to the "ON" position.
10) **Once power is applied to Bottle Filler,** the GREEN LED light should illuminate showing good filter status along with the LCD Bottle Counter.
11) **Verify proper dispensing** by depressing the button at the top of the Bottle Filler and verify water dispenses. Note: the first initial dispenses might have air in line which may cause a sputter. This will be eliminated once all air is purged from the line.
12) **Once unit tests out**, install Lower Panel back on (L)VRC water cooler. Unit is now ready for use.

OPERATION OF QUICK CONNECT FITTINGS

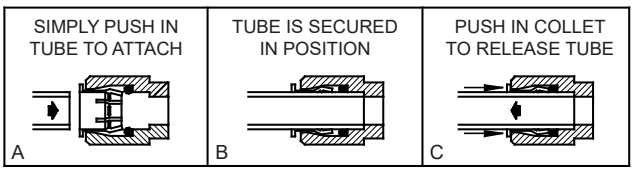

PUSHING TUBE IN BEFORE PULLING IT OUT HELPS TO RELEASE TUBE

Fig. 4

REMOVAL OF BOTTLE FILLER FOR SERVICING

1) **Turn off the water supply to the Water Cooler.** Unplug and/or turn off Circuit Breaker to Cooler and Bottle Filler.
   NOTE: the Lower Front Panel of the cooler(s) may need to be removed. To prevent scratching the basin place a towel or soft cloth over the entire basin when working above it.
2) **Loosen but DO NOT remove the two (2) Pinned Torx Head Screws** from the sides of the Bottle Filler. Remove the two (2) Pinned Torx Head Screws from the Top Cover & remove the Top Cover. The Bottle Filler may then be lifted up and off the Water Cooler (The waterline will still be connected from the Water Cooler to the Bottle Filler.)

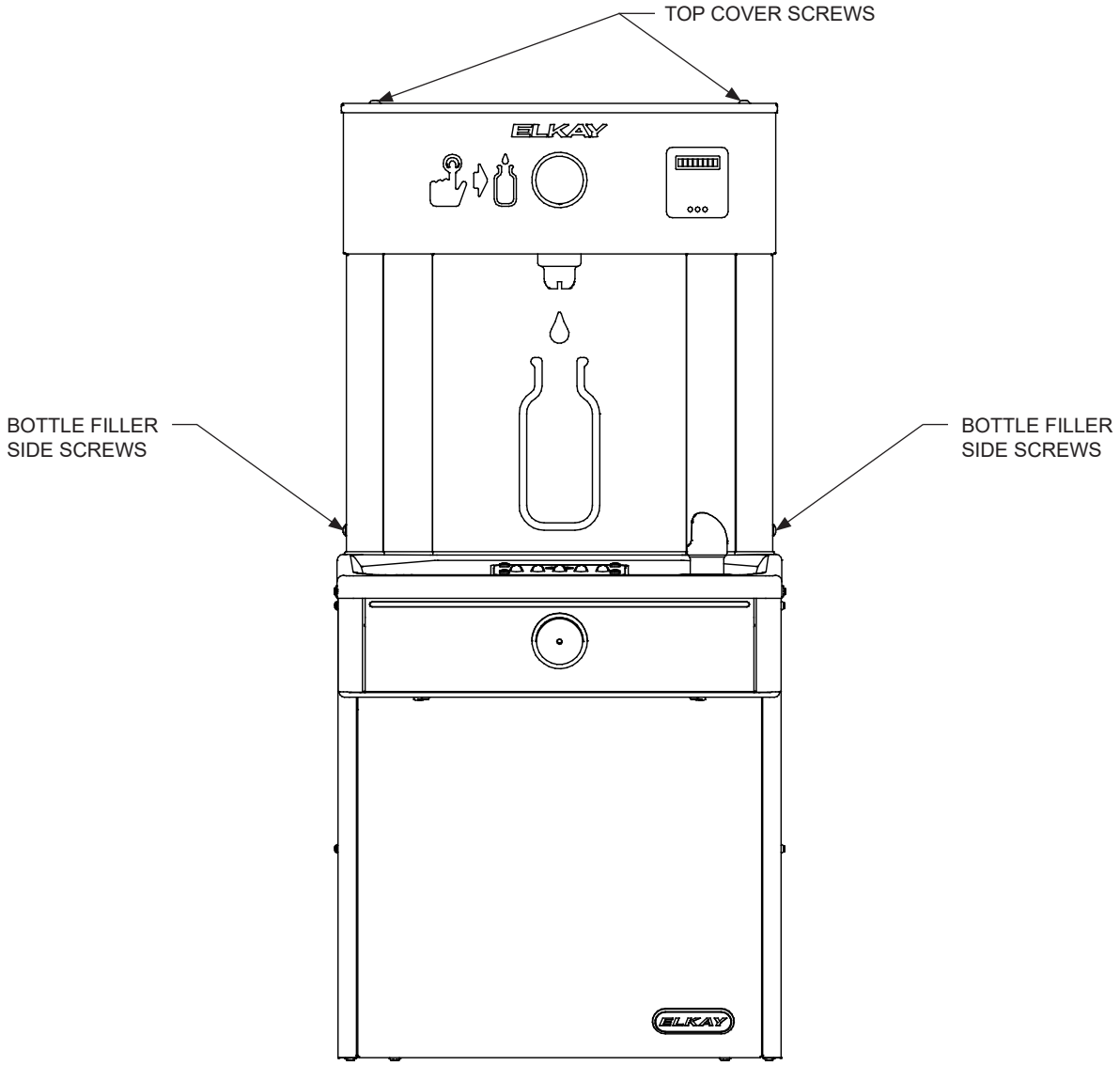

Fig. 5

PUSH BUTTON MECHANISM

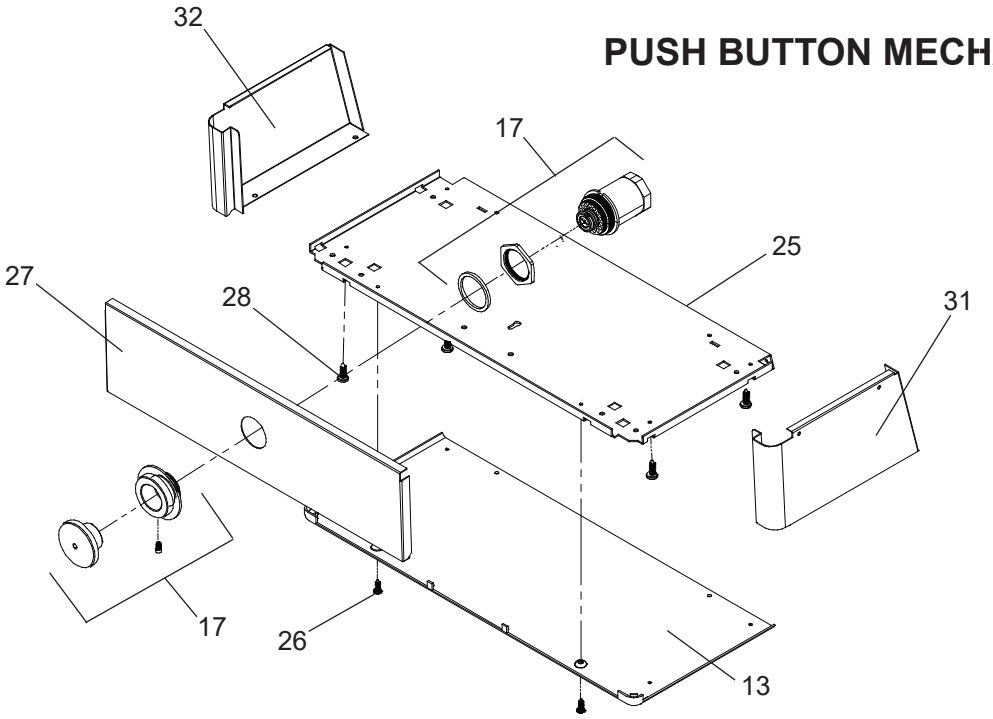

Fig. 6

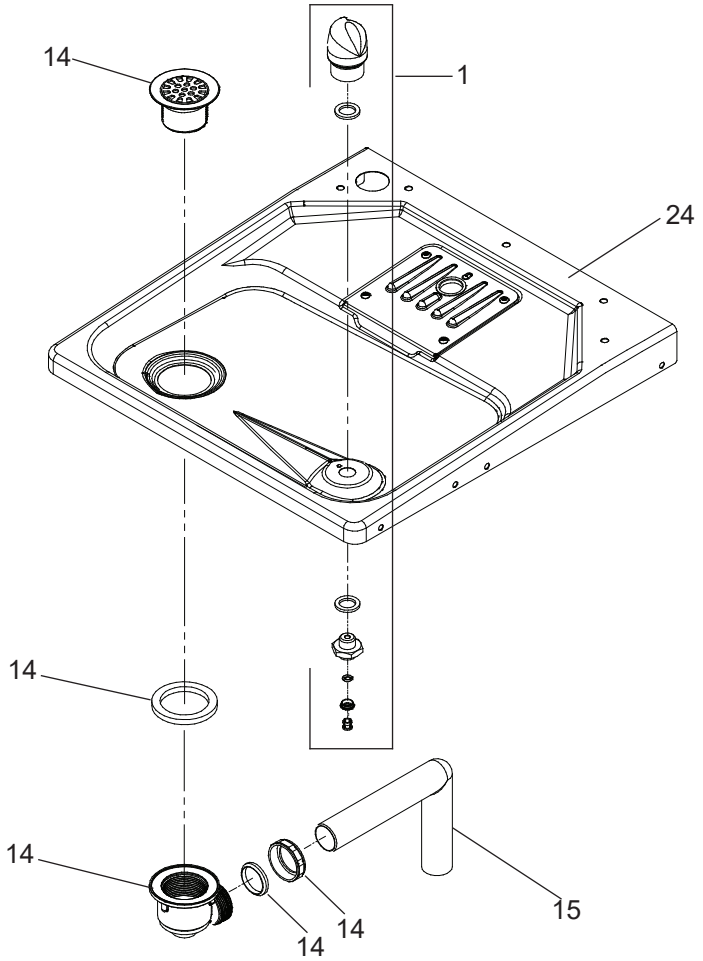

Fig. 7

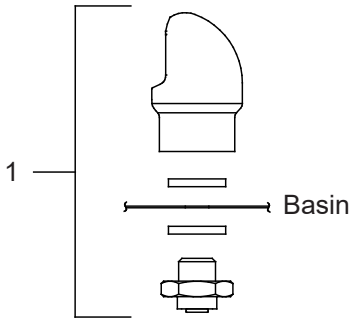

Fig. 8

VANDAL RESISTANT BUBBLER DETAIL

BF11 - BF12 PROGRAM
SETTING THE CONTROL BOARD

VERIFY CONTROL BOARD SOFTWARE

1) To verify the software program of the control board the unit will need to be shut down and restarted. The chiller (if present) does not need to be shut down and restarted.
2) The units lower panel must be open to access the power cord and wall outlet.
3) Shut down the unit by unplugging the power cord from the wall outlet or switching off the circuit breaker to the unit.
4) Restart the unit by plugging the power cord back into the wall outlet or by switching on the circuit breaker to the unit.
5) Upon start up, the bottle count display will show the software designation of BF11 or BF12.

ACCESSING THE PROGRAMMING BUTTON

1) To access the program button, remove the top cover of the bottle-filler. Remove the two (2) screws holding top cover to bottle-filler with a 5/32" allen wrench. Remove top cover. Do not discard mounting screws, they will be needed to reinstall the top cover after programming operations are completed. The programming button is located at the top right side of the unit on the control board.

RESET THE FILTER MONITOR

1) Instructions apply to filtered units only.
2) Depress the program button for approximately 2 seconds until the display changes then release. The display will change and scroll through two messages:
   "RST FLTR" – Reset Filter Monitor
   "SETTINGS" – System Settings Sub Menu
   If the program button is not pushed again the display will scroll through the two messages above for three cycles and then default back to bottle count and be back in run mode.
3) When the display changes to "RST FLTR", depress the button again. The display will change to show "FLTR =". Depress the button again and the display will show "FLTR =0"
4) The Green LED should be illuminated indicating that the visual filter monitor has been reset.

SETTING RANGE OF THE IR SENSOR WHERE APPLICABLE

1) Depress the program button for approximately 2 seconds until the display changes then release. The display will change and scroll through two messages:
   "RST FLTR" – Reset Filter Status LED
   "SETTINGS" – System Settings Sub Menu
   If the program button is not pushed again the display will scroll through the two messages above for three cycles and then default back to bottle count and be back in run mode.
2) When the display changes to "SETTINGS", depress the button again. The display will change to show
   "RNG SET" - Range set for IR sensor.
   "UNIT TYP" - Type of unit (REFRIG or NON-RFRG)
   "FLT SIZE" - Select filter capacity
   "RST BCNT" - Reset bottle count
3) When display shows "RNG SET" push program button once the display will show current value (can be 1 – 10) e.g. "RNG = 3".
4) Once display shows current value push the program button to scroll through value of 1 – 10. Select the desired range setting, "1" being closest to sensor and "10" being farthest away.
5) Once range is selected allow approximately 4 seconds to pass and then the display will go back to bottle counter and be in run mode.
6) Test bottle filler by placing bottle or hand in front of sensor to make sure water is dispensed.

SETTING UNIT TYPE

1) Depress the program button for approximately 2 seconds until the display changes then release. The display will change and scroll through two messages:
   "RST FLTR" – Reset Filter Status LED
   "SETTINGS" – System Settings Sub Menu
   If the program button is not pushed again the display will scroll through the two messages above for three cycles and then default back to bottle count and be back in run mode.

Continued from below:

2) When the display changes to "SETTINGS", depress the button again. The display will change to show
   "RNG SET" - Range set for IR sensor.
   "UNIT TYP" - Type of unit (REFRIG or NON-RFRG)
   "FLT SIZE" - Select filter capacity
   "RST BCNT" - Reset bottle count
3) When display shows "UNIT TYPE" push program button once the display will show current value. Can be REFRIG or NON-RFRG
4) Push button once to change value. Once value is selected the display will show the new value. (Can be REFRIG or NON-RFRG)
   "REFRIG" - stands for refrigerated product. In this setting the flow rate is estimated at 1.0 gallon per minute.
   "NON-RFRG" - stands for nonrefrigerated product. In this setting the flow rate is estimated at 1.5 gallons per minute. Both "REFRIG" and "NON-RFRG" simulate 1 bottle equal to 20 oz.
5) Allow approximately 4 seconds to pass and the display will return to bottle counter and be in run mode.

RESETTING BOTTLE COUNT

1) Depress the program button for approximately 2 seconds until the display changes then release. The display will change and scroll through two messages:
   "RST FLTR" – Reset Filter Status LED
   "SETTINGS" – System Settings Sub Menu
   If the program button is not pushed again the display will scroll through the two messages above for three cycles and then default back to bottle count and be back in run mode.
2) When the display changes to "SETTINGS", depress the button again. The display will change to show:
   "RNG SET"- Range set for IR sensor.
   "UNIT TYP" - Type of unit (REFRIG or NON-RFRG)
   "FLT SIZE" - Select filter capacity
   "RST BCNT" - Reset bottle count
   If the button is not pushed again the display will scroll through the four messages above for three cycles and return to run mode.
3) When display shows "RST BCNT" push program button once the display will show current value, e.g. "0033183".
4) Once display shows current value push the program button once more to reset back to 0. The display will show BTLCT = 0 for approximately 2 seconds and then return to run mode showing 00000000 bottles.
   NOTE: Once the bottle count is reset to zero there is no way to return to the previous bottle count.
5) Testing the bottle counter:
   REFRIG units: Place bottle or hand in front of sensor for approximately 9 seconds to see bottle counter count 00000001,
   (This is based on filling a 20 oz. bottle).
   NON-RFRG units: Place bottle or hand in front of sensor for approximately 6 seconds to see bottle counter count 00000001,
   (This is based on filling a 20 oz bottle).

SETTING FILTER CAPACITY

1) Depress the program button for approximately 2 seconds until the display changes then release. The display will change and scroll through two messages:
   "RST FLTR" – Reset Filter Status LED
   "SETTINGS" – System Settings Sub Menu
   If the program button is not pushed again the display will scroll through the two messages above for three cycles and then default back to bottle count and be back in run mode.
2) When the display changes to "SETTINGS", depress the button again. The display will change to show:
   "RNG SET"- Range set for IR sensor.
   "UNIT TYP" - Type of unit (REFRIG or NON-RFRG)
   "FLT SIZE" - Select filter capacity
   "RST BCNT" - Reset bottle count
   If the button is not pushed again the display will scroll through the four messages above for three cycles and return to run mode.
3) When display shows "FLT SIZE" push program button once. The display will show current value. Can be 3000GAL or 6000GAL.
4) Push program button again to display the desired "FLT SIZE".
5) Allow approximately 4 seconds to pass and the display will return to bottle counter and be in run mode.

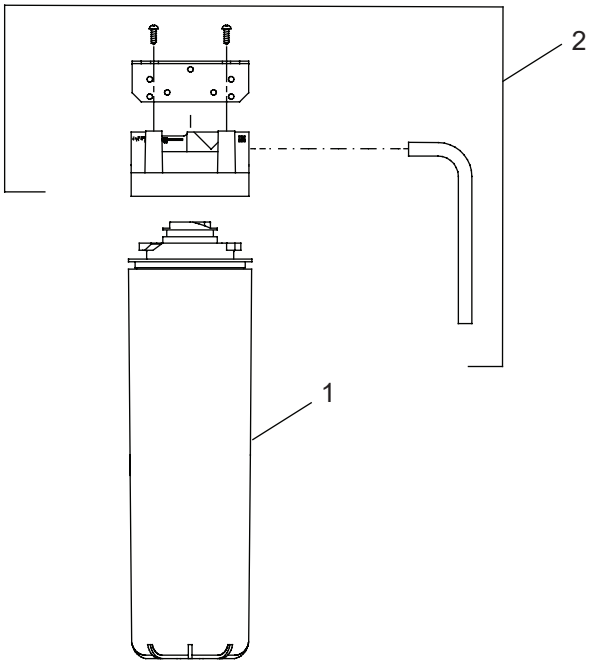

WATER FILTER EXPLODED VIEW

Fig. 9

Scan for trouble shooting and to sign up for auto replenishment of authentic Elkay filters.

WATERSENTRY® PLUS FILTER PARTS LIST		
ITEM NO.	PART NO.	DESCRIPTION
1	51300C	Filter Assy-3000 Gallon (Single)
	51300C_12PK	Filter Assy-3000 Gallon (12 Pack)
2	1000003563	Assy-Filter Head & Brkt includes Filter Head/ Mtg Brkt/Screws

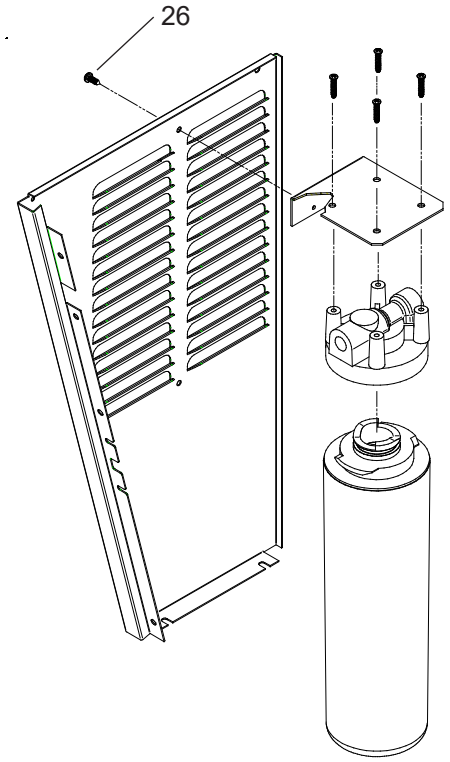

Fig. 10
Filter Installation Detail

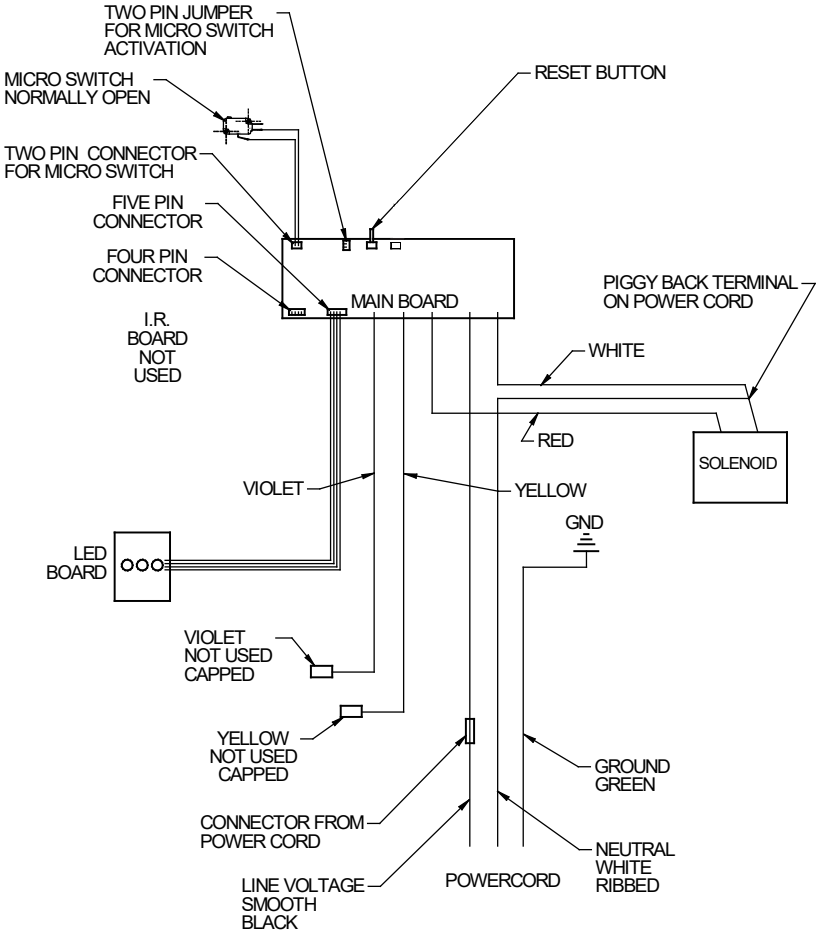

WIRING DIAGRAM 120 VOLT & 220 VOLT SINGLE & BI-LEVEL MICRO SWITCH ACTIVATION

Fig. 11

115V PARTS LIST

ITEM NO.	PART NO.	DESCRIPTION
1	97446C	Bubbler Assy - VR
2	98777C	Kit - Compressor Mtg/Clips/Studs/Grommets
3	98775C	Kit - Fan Motor/Blade/Shroud/Nut/Screws
*4	36322C	Compressor Serv. Pak
5	0000000238	Kit - Relay/Overload/Cover
6	75524C	Clip (Front & Rear Panels)
7	98776C	Kit - Condenser/Drier
8	98773C	Kit - Cold Control/Screws
9	98778C	Kit - Heat Exchanger/Drier
10	35870C	Power Cord
11	55996C	Strainer (See “General Instructions”)
12	27124C	Cover - Cold Control
13	55931C	Cover - Dispenser Bottom
14	1000001889	Kit- Drain Replacement
15	45930C	Drain Tube Assy.
16	56092C	Tubing - Poly (Cut To length)
17	2000000925	Regulator Assy - PB ST
18	66703C	Drier
19	98724C	Kit - Evaporator Assembly
20	70002C	Screw - #10 x 1/2” Lg. HHSM
21	600985551640	Drain Plug Assy-Vandal Proof
22	1000001602	Kit - Elbow 5/16” x 1/4” (3 Pack)
23	1000002062	Kit - Tee 1/4 x 1/4 x 3/8 (3 Pack)
24	29014C	Basin - Stainless Steel (VR)
25	22897C	Panel - Bottom Dispenser
26	0000001190	Kit - #10 Pinned Torx Screws/T-25 Bit
27	28516C	Panel - Dispenser Front
28	70864C	Screw - #8 x .62 Torx/Slot
29	28525C	Panel - RH Rear
30	28528C	Panel - LH Rear
31	28519C	Panel - RH Dispenser Side
32	28522C	Panel - LH Dispenser Side
NS	22955C	Panel - Front Lower
NS	29032C	Mounting Bracket

NS = NOT SHOWN

220V/240V PARTS LIST

ITEM NO.	PART NO.	DESCRIPTION
3	0000000245	Kit - Fan Motor/Blade/Shroud/Nut/Screws
*4	1000002147	Compressor Service Pak (50Hz)
	1000002146	Compressor Service Pak (60Hz)
5	98751C	Kit - Relay/OverLoad/Cover (220V/50Hz)
	98752C	Kit - Relay/OverLoad/Cover (220V/60Hz)
33	35826C	Power Inlet
34	35827C	Wire Assembly

***REPLACE WITH SAME COMPRESSOR USED IN ORIGINAL ASSEMBLY.**

NOTE: All correspondence pertaining to any of the above water coolers or orders for repair parts MUST include Model No. and Serial No. of cooler, name and part number of replacement part.

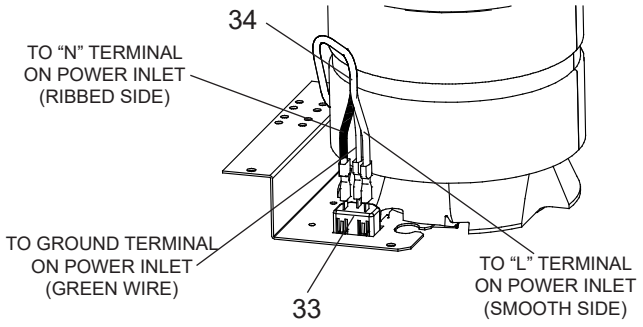

Fig. 13
220V/240V POWER INLET DETAIL

BOTTLE FILLER REPLACEMENT PART KITS

PART NO.	DESCRIPTION
98543C	Kit - Electrical Package
1000004770	Kit - Solenoid Valve Replacement 115V
98546C	Kit - Aerator Replacement
98549C	Kit - Hardware & Waterway Parts
98552C	Kit - Retro Filter Mounting
98631C	Kit - Electrical Package 220V
1000004771	Kit - Solenoid Valve Replacement 220V
98668C	Kit - Filter Mounting Cover
98999C	Kit - Drain Pad
99000C	Kit - Button Assembly
1000001907	Kit - Top Cover Replacement
2000001488	Universal Bottle Filler Gasket
99003C	Kit - Reset Switch
99004C	Kit - Micro Switch

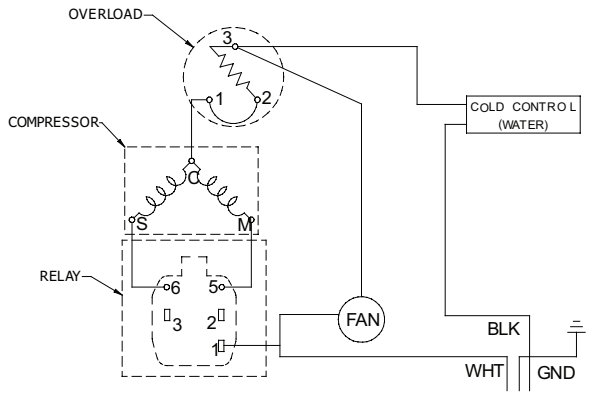

Fig. 12
115V WIRING DIAGRAM

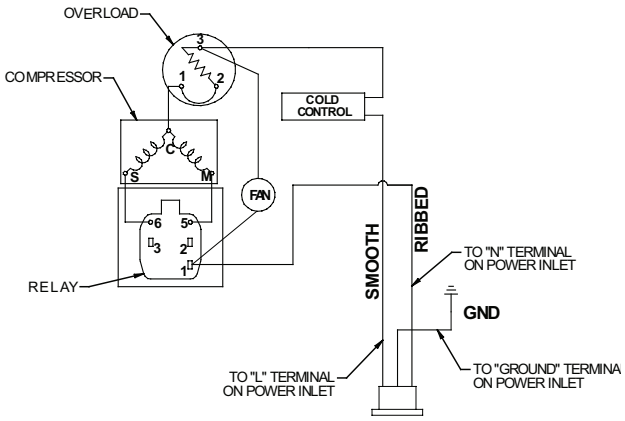

Fig. 14
220V/240V WIRING DIAGRAM

98980C

Patent zurnelkay.com/patents

PRINTED IN U.S.A.

FOR PARTS, CONTACT YOUR LOCAL DISTRIBUTOR OR CALL 1.800.834.4816
REPAIR SERVICE INFORMATION TOLL FREE NUMBER 1.800.260.6640

ELKAY MANUFACTURING CO. • 1333 BUTTERFIELD ROAD SUITE 200 • DOWNERS GROVE • IL 60515 • USA 630.574.8484 • www.elkay.com