ELKAY®

GreenSpec® LISTED
www.GreenSpec.com

INSTALLATION and USE MANUAL

VRC8TLWS™ Series Water Coolers with ezH2O® Bottle Filling Stations

Refrigeradores de agua serie VRCTL8WS™ con estaciones de llenado de botellas ezH2O®

Les refroidisseurs d'eau de la série VRCTL8WS™ avec des stations de remplissage de bouteilles ezH2O®

Model VRCTL8WS

Model VRCTLR8WS

TOOLS REQUIRED
BUT NOT PROVIDED:

SAFETY GLASSES
GLOVES
ELECTRIC DRILL
3/4” WRENCH OR CRESCENT WRENCH
UTILITY KNIFE
TAPE MEASURE
PENCIL
CENTER PUNCH
1/2” SOCKET & RATCHET WRENCH
5/32” ALLEN WRENCH

HERRAMIENTAS NECESARIAS
PERO NO SUMINISTRADO:

LENTES DE SEGURIDAD
GUANTES
TALADRO ELÉCTRICO
3/4“ LLAVE AJUSTABLE
CUCHILLO PARA USO GENERAL
CINTA MÉTRICA
LÁPIZ
SACADOR DE CENTRO
TOMA DE 1/2” Y LLAVE DE TRINQUETE
5/32” LLAVE ALLEN

OUTILS NÉCESSAIRES
MAIS NON FOURNI:

LUNETTES DE PROTECTION
GANTS
PERCEUSE ÉLECTRIQUE
3/4” CLÉ À MOLETTE
COUTEAU UTILITAIRE
RUBAN À MESURER
CRAYON
OUTIL CENTER PUNCH
DOUILLE 1/2”& CLÉ À CLIQUET
5/32” CLÉ ALLEN

IMPORTANT! INSTALLER PLEASE NOTE

THE GROUNDING OF ELECTRICAL EQUIPMENT SUCH AS TELEPHONE, COMPUTERS, ETC. TO WATER LINES IS A COMMON PROCEDURE. THIS GROUNDING MAY BE IN THE BUILDING OR MAY OCCUR AWAY FROM THE BUILDING. THIS GROUNDING CAN CAUSE ELECTRICAL FEEDBACK INTO A FOUNTAIN, CREATING AN ELECTROLYSIS WHICH CAUSES A METALLIC TASTE OR AN INCREASE IN THE METAL CONTENT OF THE WATER. THIS CONDITION IS AVOIDABLE BY USING THE PROPER MATERIALS AS INDICATED. ANY DRAIN FITTINGS PROVIDED BY THE INSTALLER SHOULD BE MADE OF PLASTIC TO ELECTRICALLY ISOLATE THE FOUNTAIN FROM THE BUILDING PLUMBING SYSTEM. WE SUGGEST THAT THE BOTTLE FILLING STATION AND WATER COOLER BE PROTECTED BY A GROUND FAULT CIRCUIT INTERRUPTER (GFCI).

LA PUESTA A TIERRA DE EQUIPOS ELÉCTRICOS COMO TELÉFONO, ORDENADORES, ETC. A LAS LÍNEAS DE AGUA ES UN PROCEDIMIENTO COMÚN. ESTA PUESTA A TIERRA PUEDE ESTAR EN EL EDIFICIO O PUEDE OCURRIR LEJOS DEL EDIFICIO. ESTA PUESTA A TIERRA PUEDE CAUSAR REACCIÓN ELECTRICA EN UNA FUENTE, CREANDO UN ELECTRÓLISIS QUE CAUSA UN GUSTO METÁLICO O UN AUMENTO EN EL CONTENIDO METÁLICO DEL AGUA. ESTA CONDICIÓN ES EVITABLE UTILIZANDO LOS MATERIALES APROPIADOS COMO SE INDICA. CUALQUIER ACOPLAMIENTO DE DRENAJE PROPORCIONADO POR EL INSTALADOR DEBE SER HECHO DE PLÁSTICO PARA AISLAR ELÉCTRICAMENTE LA FUENTE DEL SISTEMA DE PLOMERÍA DE CONSTRUCCIÓN. SUGERIMOS QUE LA ESTACIÓN DE LLENADO DE BOTELLAS Y EL REFRIGERADOR DE AGUA ESTÉ PROTEGIDA POR UN INTERRUPTOR DE CIRCUITO DE FALLA DE TIERRA (GFCI).

LA MISE À LA TERRE D’ÉQUIPEMENT ÉLECTRIQUE COMME TELEPHONE, COMPUTERS, ETC. AUX LIGNES D’EAU EST UNE PROCÉDURE COMMUNE. CETTE MISE À LA TERRE PEUT ETRE DANS LE BÂTIMENT OU PEUT DÉCOURIR LE BÂTIMENT. CETTE MISE À LA TERRE PEUT CAQUER UN RÉTROACEMENT ÉLECTRIQUE DANS UNE FONTAINE, CRÉANT UNE ÉLECTROLYSE QUI CAUSE UN GOUT MÉTALLIQUE OU UNE AUGMENTATION DU CONTENU MÉTALLIQUE DE L’EAU. CETTE CONDITION EST ÉVALUABLE EN UTILISANT LES MATÉRIELS PROPRES COMME INDIQUÉS. TOUS LES RACCORDS DE SERRAGE FOURNIS PAR L’INSTALLATEUR DEVRAIENT ÊTRE FABRIQUES EN PLASTIQUE POUR ISOLER À L’ÉLECTRICITÉ LA FONTAINE DU SYSTÈME DE PLOMBERIE DU BÂTIMENT. Nous souhaitons que la station de remplissage de la bouteille et le refroidisseur d’eau soient protégés par un INTERRUPTEUR DE CIRCUIT DE DÉFAUT DE TERRE (GFCI).

(L)VRC8WS Bottle Fillers are among the easiest to install on the market today. To insure you install these models easily and correctly, PLEASE READ THESE SIMPLE INSTRUCTIONS BEFORE STARTING THE INSTALLATION. CHECK YOUR INSTALLATION FOR COMPLIANCE WITH PLUMBING, ELECTRICAL, AND OTHER APPLICABLE CODES. After installation, leave these instructions with the Fountain for future reference.

(L)VRC8WS rellenos de botella están entre los más fáciles de instalar en el mercado hoy en día. Para asegurar que instale estos modelos fácilmente y correctamente, POR FAVOR LEA ESTAS SIMPLES INSTRUCCIONES ANTES DE INICIAR LA INSTALACIÓN. COMPRUEBE SU INSTALACIÓN PARA CUMPLIR CON LA PLOMERÍA, ELÉCTRICO, Y OTROS CÓDIGOS APLICABLES. Después de la instalación, deje estas instrucciones con la fuente para futuras referencias.

Les garnitures de bouteilles (L)VRC8WS sont parmi les plus faciles à installer sur le marché aujourd’hui. Pour vous assurer d’installer ces modèles facilement et correctement, VEUILLEZ LIRE CES INSTRUCTIONS SIMPLES AVANT DE DÉMARRER L’INSTALLATION. VÉRIFIEZ VOTRE INSTALLATION POUR CONFORMITÉ AVEC PLOMBERIE, ÉLECTRIQUE ET AUTRES CODES APPLICABLES. Après l’installation, laissez ces instructions avec la fontaine pour référence ultérieure.

Note: Danger! Electric shock hazard. Disconnect power before servicing unit.

Nota: peligro! Peligro de descarga eléctrica. Desconecte antes de reparar la unidad.

Remarque : Danger ! Risque d'électrocution. Débrancher avant de réparer l'appareil.

Pictured is unit only without bottle filler.
En la foto, la unidad sólo sin relleno botella.
Sur la photo, est une unité seulement sans remplissage de la bouteille.

Uses HFC-134A refrigerant
Usa refrigerante HFC-134A
Utilise du fluide frigorigéne HFC-134A

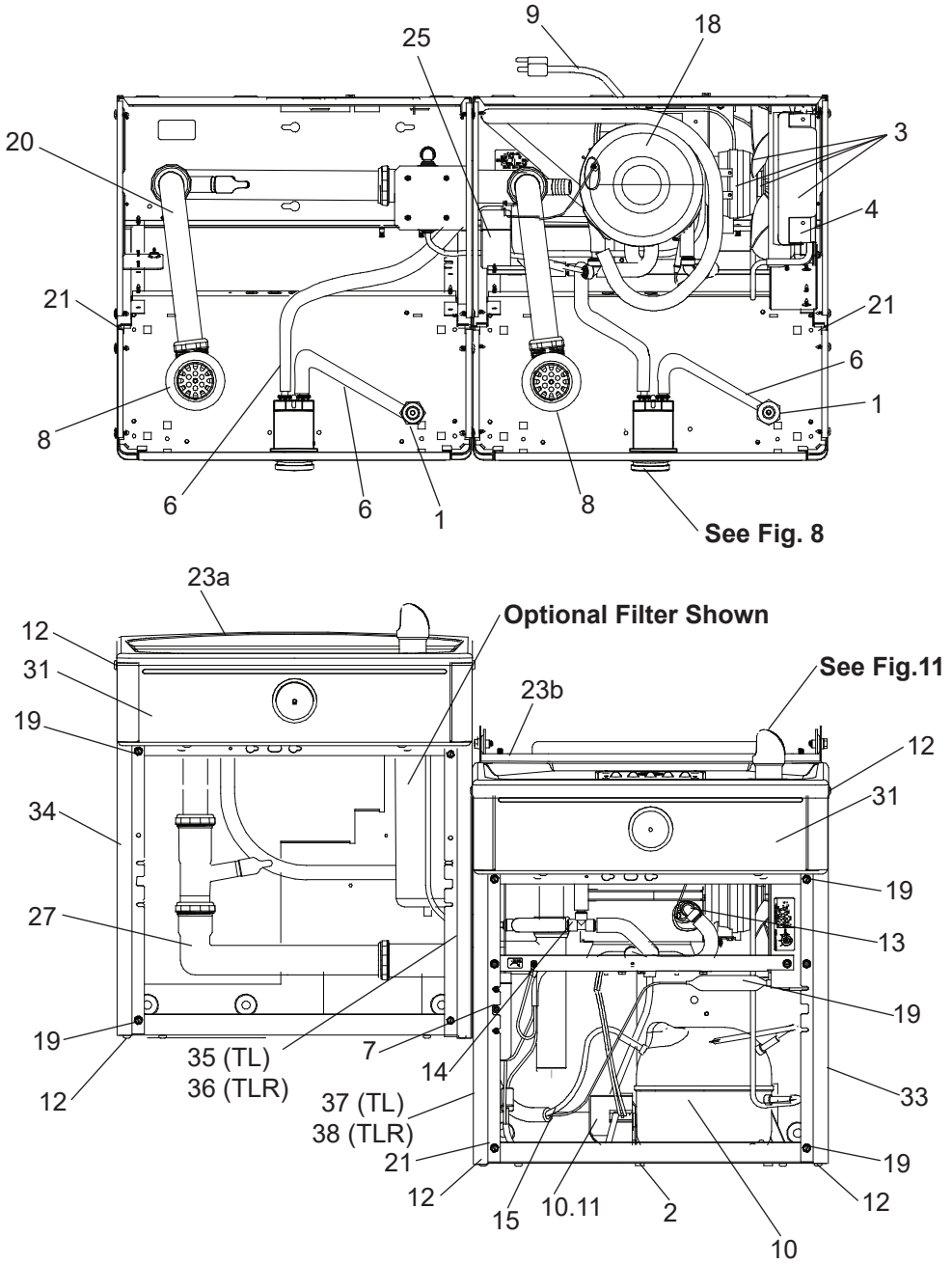

NOTE: Non-refrigerated units do not include all electrical and refrigeration components shown above.
Other components and rough-in are the same as shown.
NOTA: Las unidades no frigorificadas no incluyen todos los componentes eléctricos y de la refrigeración demostrados arriba. Otros componentes y a'spero-en son iguales según lo demostrado.
NOTE: Les unités non frigorifiées n'incluent pas tous les composants électriques et de réfrigération montrés ci-dessus. D'autres composants et rugueux-dans sont identiques que montrés.

FIG. 1
LVRCTL8 SHOWN

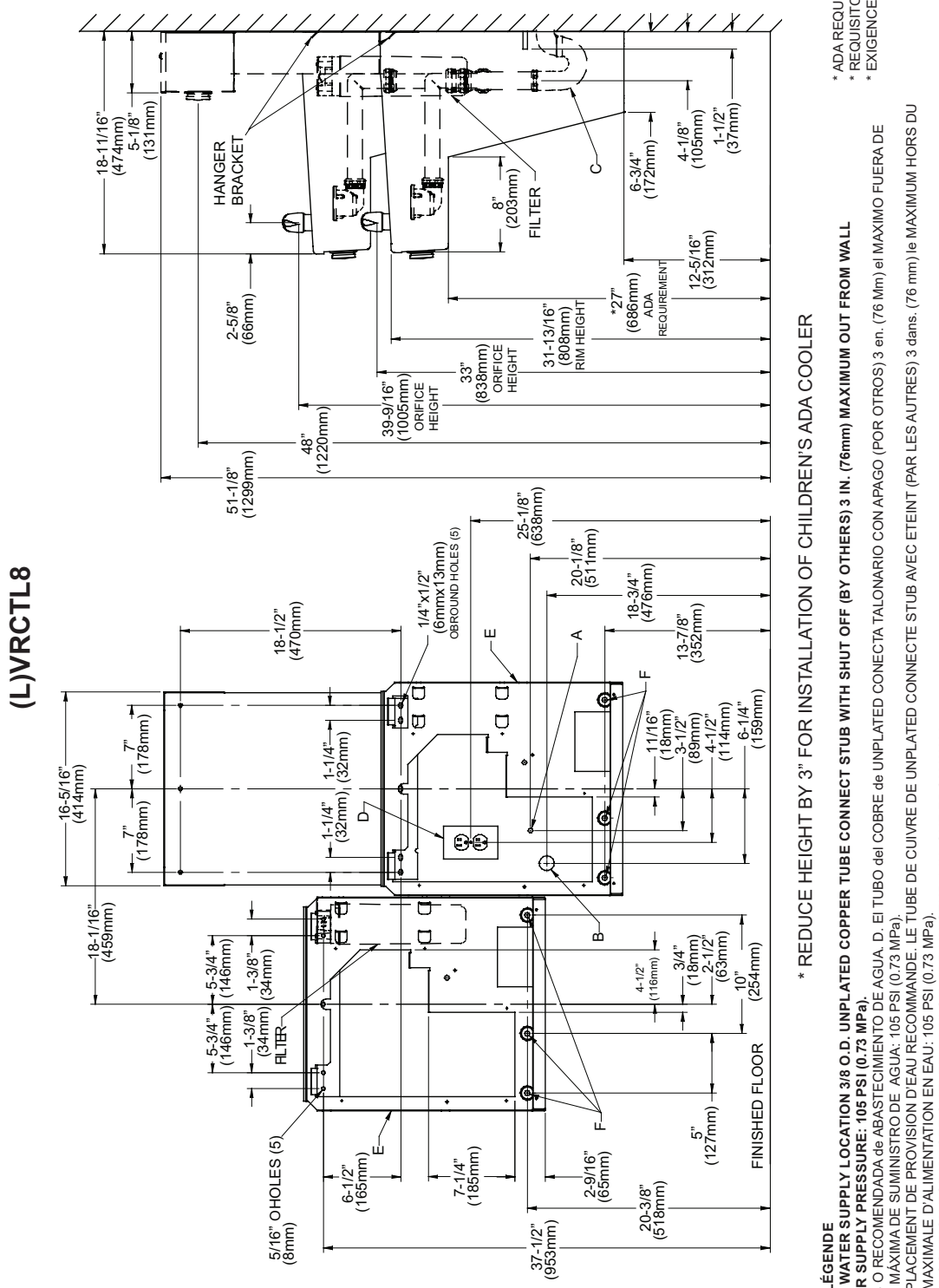

* REDUCE HEIGHT BY 3" FOR INSTALLATION OF CHILDREN'S ADA COOLER

* ADA REQUIREMENT
* REQUISITO DE A.D.A.
* EXIGENCE ADA

LEGEND/LEYENDA/LÉGENDE

A = RECOMMENDED WATER SUPPLY LOCATION 3/8 O.D. UNPLATED COPPER TUBE CONNECT STUB WITH SHUT OFF (BY OTHERS) 3 IN. (76mm) MAXIMUM OUT FROM WALL
MAXIMUM WATER SUPPLY PRESSURE: 105 PSI (0.73 MPa).
La UBICACION 3/8 O RECOMENDADA de ABASTECIMIENTO DE AGUA. D. El TUBO del COBRE de UNPLATED CONECTA TALONARIO CON APAGO (POR OTROS) 3 en. (76 Mm) el MAXIMO FUERA DE PARED, PRESIÓN MÁXIMA DE SUMINISTRO DE AGUA: 105 PSI (0.73 MPa).
L'O.D de 3/8 d'EMPLACEMENT DE PROVISION D'EAU RECOMMANDE. LE TUBE DE CUIVRE DE UNPLATED CONNECTE STUB AVEC ETEINT (PAR LES AUTRES) 3 dans. (76 mm) le MAXIMUM HORS DU MUR, PRESSION MAXIMALE D'ALIMENTATION EN EAU: 105 PSI (0.73 MPa).

B = RECOMMENDED LOCATION FOR WASTE OUTLET 1-1/2" O.D. DRAIN STUB 2 IN. OUT FROM WALL
UBICACION RECOMENDADA PARA EL DRENAJE DE SALIDA DE AGUA, DE 1-1/2" DE DIÁMETRO. El TALONARIO 2 FUERA DE PARED
EMPLACEMENT RECOMMANDÉ POUR LE DRAIN DE D.E. 1-1/2" DE SORTIE D'EAU. STUB 2 HORS DU MUR

C = 1-1/2 TRAP NOT FURNISHED
PURGADOR DE 1-1/2 NO PROPORCIONADO
SIPHON 1-1/2 NON FOURNI

D = ELECTRICAL SUPPLY (3) WIRE RECESSED BOX
CAJA RECESIVA DE ALAMBRES (3) DE SUMINISTRO ELÉCTRICO
BOÎTE ENCASTRÉE D'ALIMENTATION ÉLECTRIQUE (3) FILS

E = INSURE PROPER VENTILATION BY MAINTAINING 6" (152 mm) (MIN.) CLEARANCE FROM CABINET LOUVERS TO WALL.
ASEGURE UNA VENTILACIÓN ADECUADA MANTENIENDO UN ESPACIO E 6" (152 mm) (MÍN.) DE HOLGURA ENTRE LA REJILLA DE VENTILACIÓN DEL MUEBLE Y LA PARED
ASSUREZ-VOUS UNE BONNE VENTILATION EN GARDANT 6" (152 mm) (MIN.) ENTRE LES ÉVENTS DE L'ENCEINTE ET LE MUR.

F = 7/16 BOLT HOLES FOR FASTENING UNIT TO WALL
AGUJEROS DE LAS TUERCAS DE 7/16 PARA SUJETAR LA UNIDAD A LA PARED
TROUS D'ÉCROUS 7/16 POUR FIXER L'APPAREIL AU MUR

****NEW INSTALLATIONS MUST USE GROUND FAULT CIRCUIT INTERRUPTER (GFCI)**
****Las nuevas instalaciones deben utilizar el interruptor de circuito de tierra de la avería (GFCI)**
****Les nouvelles installations doivent employer l'interrupteur de circuit moulu de défaut (GFCI)**

FIG. 2

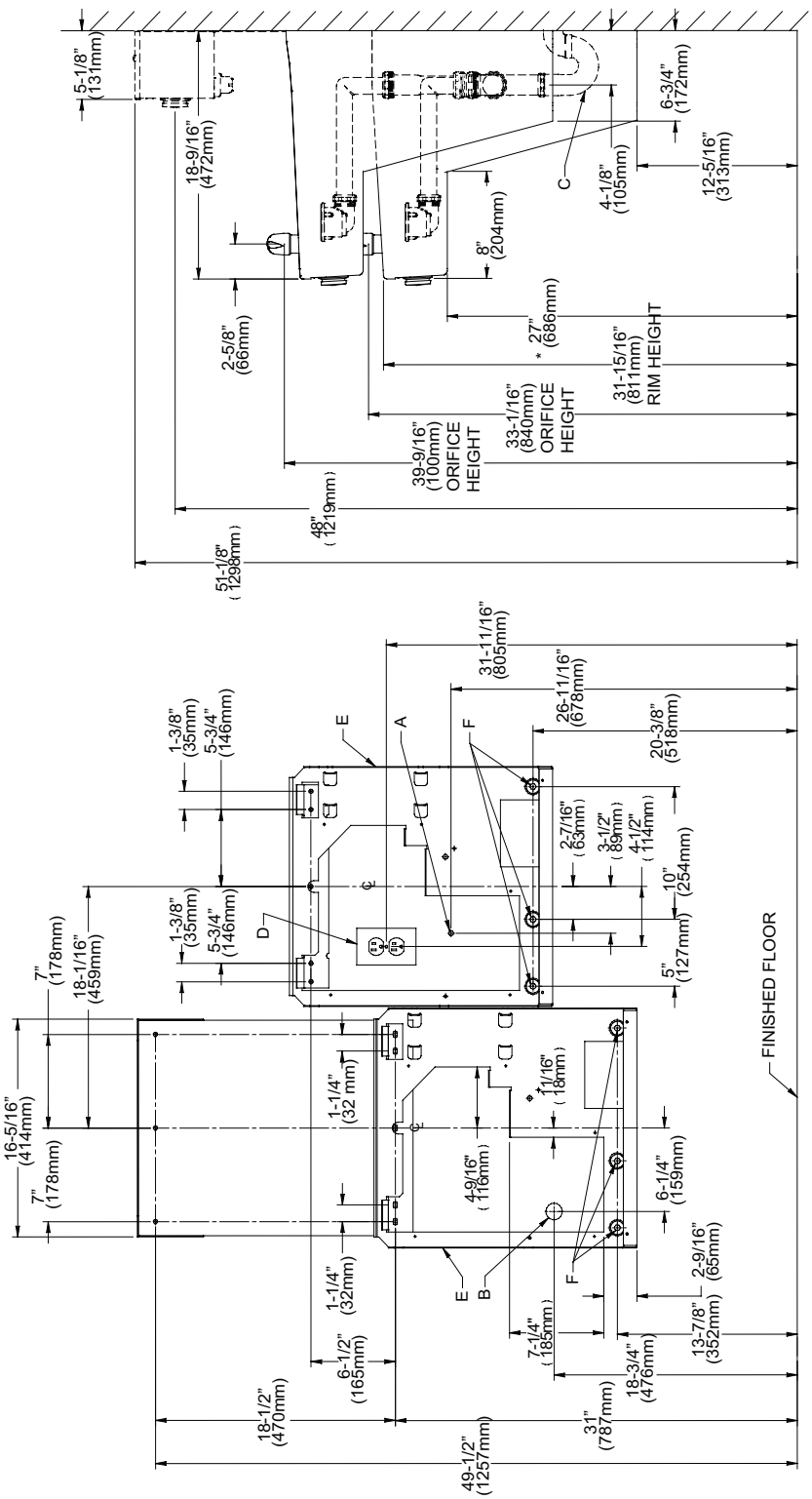

* REDUCE HEIGHT BY 3" FOR INSTALLATION OF CHILDREN'S ADA COOLER

* ADA REQUIREMENT
* REQUISITO DE A.D.A.
* EXIGENCE ADA

LEGEND/LEYENDA/LÉGENDE

A = RECOMMENDED WATER SUPPLY LOCATION 3/8 O.D. UNPLATED COPPER TUBE CONNECT STUB WITH SHUT OFF (BY OTHERS) 3 IN. (76mm) MAXIMUM OUT FROM WALL
MAXIMUM WATER SUPPLY PRESSURE: 105 PSI (0.73 MPa).
La UBICACION 3/8 O RECOMENDADA de ABASTECIMIENTO DE AGUA. D. El TUBO del COBRE de UNPLATED CONECTA TALONARIO CON APAGO (POR OTROS) 3 en. (76 Mm) el MAXIMO FUERA DE PARED, PRESIÓN MÁXIMA DE SUMINISTRO DE AGUA: 105 PSI (0.73 MPa).
L'O.D de 3/8 d'EMPLACEMENT DE PROVISION D'EAU RECOMMANDE. LE TUBE DE CUIVRE DE UNPLATED CONNECTE STUB AVEC ETEINT (PAR LES AUTRES) 3 dans. (76 mm) le MAXIMUM HORS DU MUR, PRESSION MAXIMALE D'ALIMENTATION EN EAU: 105 PSI (0.73 MPa).

B = RECOMMENDED LOCATION FOR WASTE OUTLET 1-1/2" O.D. DRAIN STUB 2 IN. OUT FROM WALL
UBICACIÓN RECOMENDADA PARA EL DRENAJE DE SALIDA DE AGUA, DE 1-1/2" DE DIÁMETRO. El TALONARIO 2 FUERA DE PARED
EMPLACEMENT RECOMMANDÉ POUR LE DRAIN DE D.E. 1-1/2" DE SORTIE D'EAU. STUB 2 HORS DU MUR

C = 1-1/2 TRAP NOT FURNISHED
PURGADOR DE 1-1/2 NO PROPORCIONADO
SIPHON 1-1/2 NON FOURNI

D = ELECTRICAL SUPPLY (3) WIRE RECESSED BOX
CAJA RECESIVA DE ALAMBRES (3) DE SUMINISTRO ELÉCTRICO
BOÎTE ENCASTRÉE D'ALIMENTATION ÉLECTRIQUE (3) FILS

E = INSURE PROPER VENTILATION BY MAINTAINING 6" (152 mm) (MIN.) CLEARANCE FROM CABINET LOUVERS TO WALL.
ASEGURE UNA VENTILACIÓN ADECUADA MANTENIENDO UN ESPACIO E 6" (152 mm) (MÍN.) DE HOLGURA ENTRE LA REJILLA DE VENTILACIÓN DEL MUEBLE Y LA PARED
ASSUREZ-VOUS UNE BONNE VENTILATION EN GARDANT 6" (152 mm) (MIN.) ENTRE LES ÉVENTS DE L'ENCEINTE ET LE MUR.

F = 7/16 BOLT HOLES FOR FASTENING UNIT TO WALL
AGUJEROS DE LAS TUERCAS DE 7/16 PARA SUJETAR LA UNIDAD A LA PARED
TROUS D'ÉCROUS 7/16 POUR FIXER L'APPAREIL AU MUR

****NEW INSTALLATIONS MUST USE GROUND FAULT CIRCUIT INTERRUPTER (GFCI)**
****Las nuevas instalaciones deben utilizar el interruptor de circuito de tierra de la avería (GFCI)**
****Les nouvelles installations doivent employer l'interrupteur de circuit moulu de défaut (GFCI)**

FIG. 3

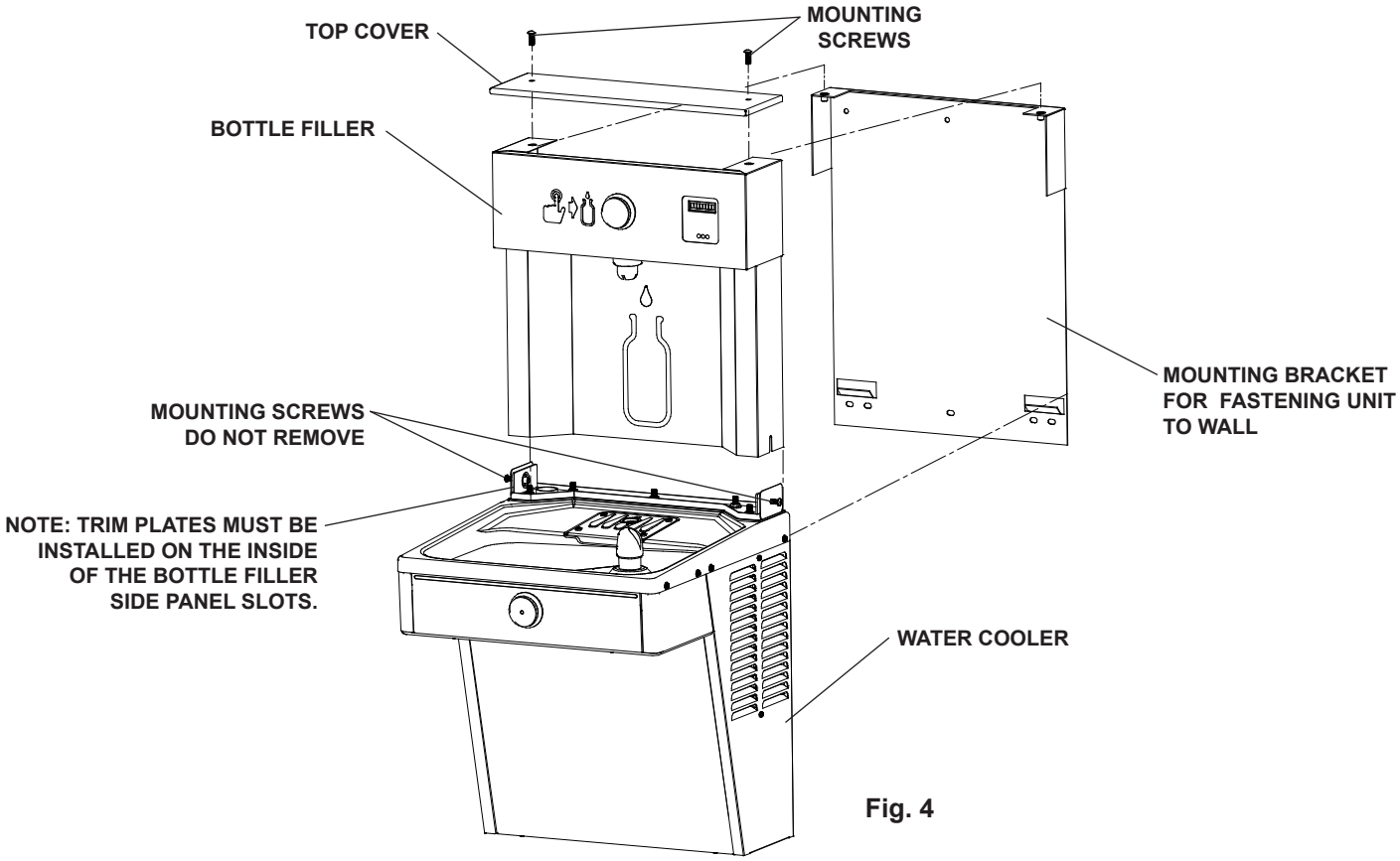

Fig. 4

BOTTLE FILLER INSTALLATION

1) **Remove wall mounting plates from Coolers.** Install Wall Mounting Plates as per rough-in diagrams on Page 4 or 5 of this instruction.
   NOTE: Mounting plates MUST be supported securely. Add fixture support carrier if wall will not provide adequate support.
2) **Install lower water cooler only** at this time onto bracket as per rough-in diagram (See rough-in on Page 4 or 5). DO NOT connect power to cooler at this time or turn water supply on.
3) **Remove (L)VRCTL Bottle Filler from carton.** Lay Bottle Filler on water cooler basin and cut insulation from tube even with bottom of unit, remove this insulation from the 3/8" tube, but do not discard. Feed the powercord and waterline through the hole on top of water cooler.
   NOTE: To prevent scratching the basin place a towel or soft cloth over the entire basin when working above it.
4) **With the power cord and waterline** on top of water cooler, place Bottle Filler onto mounting bracket on basin. (See Fig. 4). Make sure bottle filler is installed properly on the basin gasket.
5) **Once Bottle Filler is installed on basin mounting bracket,** tighten the two screws (supplied) one on each side of the bottle filler. Install Top Cover on Bottle Filler (See Fig. 4) with two mounting screws (supplied). **Caution do not over tighten screws.**
6) **Secure non-refrigerated unit to wall,** connect drains and water inlet.
7) **Install the 1/4" poly tubing and insulation** from the outlet of the filter to the union on top of the evaporator. Install the 1/4" poly tubing and insulation from the regulator in the non-refrigerated cooler to one of the tees at the evaporator outlet. Install remaining tube insulation to the water line from bottle filler, connect Bottle Filler waterline inside of the water cooler by connecting the 3/8" water line to the tee.
8) **For Model LVRCTL Install filter cartridge, remove filter from carton,** remove protective cap, attach filter to filter head by firmly inserting into head and rotating filter clockwise.
   NOTE: If existing plumbing rough-in locations (Drain, Water In, Electric Supply) do not allow the filter to be mounted inside the cooler cabinet the filter can be installed horizontally below the unit. A retrofit kit is available to mount the filter beneath the cooler.
9) **Turn water supply on and inspect for leaks.** Fix all leaks before continuing.
10) **Once unit has been inspected for leaks** and any leaks that are found are corrected, plug Bottle Filler and (L)VRCTL unit into wall. Be sure to reinstall fuse to the circuit or switch the circuit breaker back to the "ON" position.
11) **Once power is applied to Bottle Filler,** the GREEN LED light should illuminate showing good filter status along with the LCD Bottle Counter.
12) **Verify proper dispensing by depressing the button** at the top of the Bottle Filler and verify water dispenses. Note: the first initial dispenses might have air in line which may cause a sputter. This will be eliminated once all air is purged from the line.
13) **Once unit tests out,** install Lower Panel back on (L)VRCTL water coolers. Unit is now ready for use.

OPERATION OF QUICK CONNECT FITTINGS

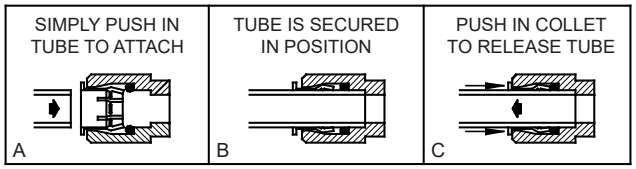

PUSHING TUBE IN BEFORE PULLING IT OUT HELPS TO RELEASE TUBE

Fig. 5

REMOVAL OF BOTTLE FILLER FOR SERVICING

1) **Turn off the water supply** to the Water Coolers. Unplug and/or turn off Circuit Breaker to Cooler(s) and Bottle Filler. **NOTE:** the Lower Front Panel of the coolers may need to be removed. To prevent scratching the basin place a towel or soft cloth over the entire basin when working above it.
2) **Loosen but DO NOT remove the Pinned Torx Head Screw** from the outer side of the Bottle Filler and loosen but DO NOT remove the 1/4" hex. head bolt from between the two cooler (See Figs 6 or 7). Remove the two (2) Pinned Torx Head Screws from the Top Cover & remove the Top Cover. The Bottle Filler may then be lifted up and off the Water Cooler (The water line will still be connected from the Water Cooler to the Bottle Filler.)

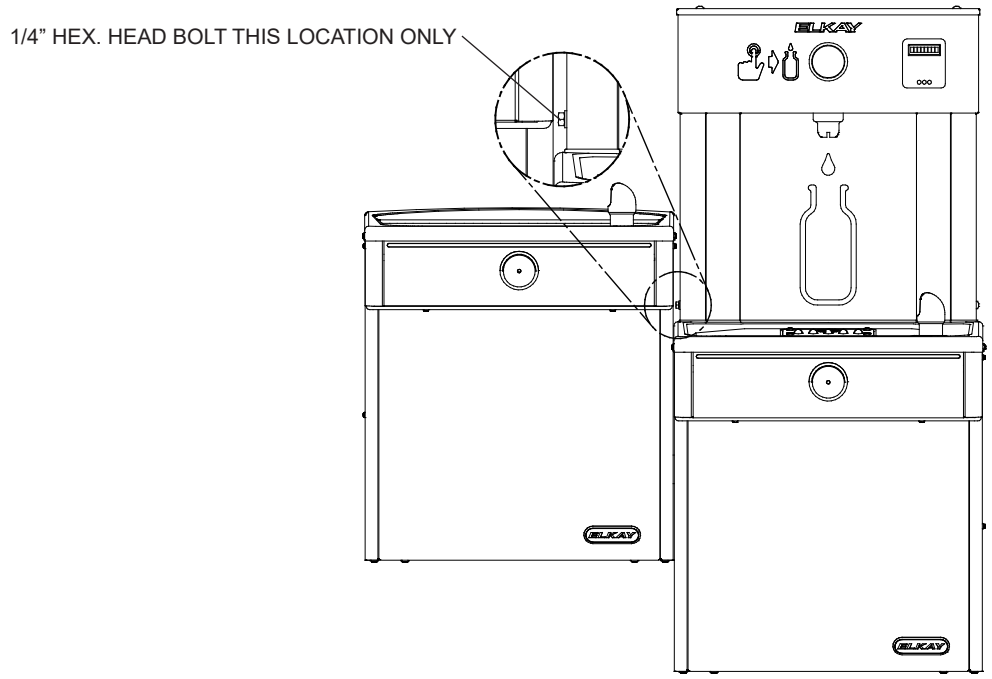

Fig. 6

STANDARD TWO-LEVEL CONFIGURATION

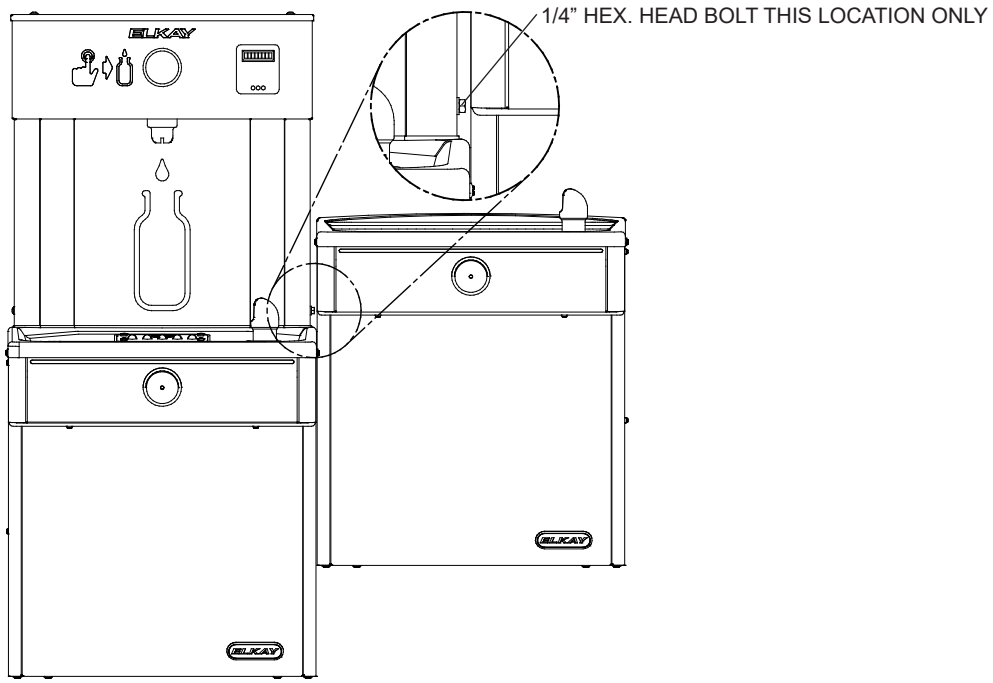

STANDARD TWO-LEVEL REVERSED CONFIGURATION

Fig. 7

IMPORTANT
ALL SERVICE TO BE PERFORMED BY AN AUTHORIZED SERVICE PERSON

HANGER BRACKETS & TRAP INSTALLATION

1) Remove hanger bracket fastened to back of cooler by removing one (1) screw.
2) Mount the hanger bracket and trap as shown in Figure 2 or 3.

NOTE: Hanger Bracket MUST be supported securely. Add fixture support carrier if wall will not provide adequate support.

IMPORTANT:

- 4 1/8 in. (121mm) dimension from wall to centerline of trap must be maintained for proper fit.
- Anchor hanger securely to wall using all five (5) 1/4 in. dia. mounting holes.

3) Install straight valve for 3/8" O.D. tube.

INSTALLATION OF COOLER

4) Hang the cooler on the hanger bracket. Be certain the hanger bracket is engaged properly in the slots on the cooler back as shown in Figure 2 or 3.
5) Loosen the two (2) screws holding the lower front panel at the bottom of cooler base and two (2) screws at the top **(Use torx bits sold separately)**. Remove the front panel and set aside.
6) Connect water inlet line--See Note 4 of General Instructions.
7) Remove the slip nut and gasket from the trap and install them on the cooler waste line making sure that the end of the waste line fits into the trap. Assemble the slip nut and gasket to the trap and tighten securely.

START UP

Also See General Instructions

8) Stream height is factory set at 45-50 PSI. If supply pressure varies greatly from this, adjust screw using the access hole in the pushbutton (insert screwdriver). CW adjustment will raise stream and CCW adjustment will lower stream. For best adjustment, stream should hit basin approximately 6-1/2" (165mm) from bubbler.

IMPORTANTE
TODO EL SERVICIO DEBERÁ SER EFECTUADO POR UNA PERSONA DE SERVICIO AUTORIZADA

INSTALACIÓN DE FIJADOR DE SUSPENSIÓN Y DEL PURGADOR

1) Quite el fijador de suspensión sujetados a la parte posterior del enfriador quitando un (1) tornillo.
2) Monte el fijador de suspensión y quite el purgador como se muestra en la Fig. 2 o 3.

NOTA: El fijador de suspensión DEBE de ser sostenido con seguridad. Coloque portadores de soporte de instalaciones fijas si la pared no proveerá un soporte adecuado.

IMPORTANTE:

- Se debe mantener una dimensión de 4 1/8 pulgadas (121mm) desde la pared hasta la línea central del purgador para que calce de forma adecuada.
- Ancle el suspensor de forma segura a la pared usando todos los cinco (5) agujeros de montaje de 1/4" de diámetro.

3) Instale la válvula directa para el tubo de 3/8" de diámetro externo.

INSTALACIÓN DEL ENFRIADOR DE AGUA

4) Suspenda el enfriador en el fijador de suspensión. Asegúrese que el fijador de suspensión calce correctamente en las ranuras de la parte posterior del enfriador como se indica en la figura 2 o 3.
5) Afloje los dos (2) tornillos que sostienen la parte inferior del panel en la parte inferior de la base del enfriador y los dos (2) tornillos en la parte superior **(Utilice los pedacitos torx vendidos por separado)**. Quite el panel frontal y póngalo a un lado.
6) Conectar el tubo de entrada de agua. Ver la Nota 4 en las Instrucciones Generales.
7) Saque la tuerca deslizante y empaquetadura del colector e instálelos en la manquera de residous de la nevera, asequrándose que el extremo de la manquera encaje en el colector. Coloque la tuerca deslizante y la empaquetadura en el colector y apriete firmermente.

PUESTA EN MARCHA

Ver también las Instrucciones Generales

8) La altura del chorro se ajusta en la fábrica a 45-50 PSI. Si la presión de suministro varía mucho de esta valor, ajustar el tornillo usar el agujero de acceso en el botón. El ajuste en sentido horario elvará el chorro y en sentido contrahorario lo bajará (inserte el destornillador). Para un ajuste mejor, el chorro debe chocar con el depósito aproximadamente a 6-1/2"(165mm) del borboteador.

IMPORTANT
TOUT ENTRETIEN DOIT ÊTRE EFFECTUÉ PAR UN REPRÉSENTANT AUTORISÉ

INSTALLATION DU SIPHON ET DU SUPPORT DE SUSPENSION

1) Retirez le support de suspension à l'arrière du refroidisseur en enlevant une (1) vis.
2) Installez le support et le siphon tel qu'indiqué à la fig. 2 ou 3.

NOTE : Le support de suspension DOIT être bien retenu en place. Ajoutez des ferrures de fixation si le mur n'offre pas le soutien voulu.

IMPORTANT :

- Pour avoir une bonne position, on doit garder une dimension de 4 1/8 po. (121mm) du mur à l'axe central du siphon.
- Ancrez solidement le support au mur à l'aide des five (5) trous de fixation d'un diam. 1/4 po.

3) Installez la soupape droite dans le tuyau de D.E. 3/8".

INSTALLATION DU REFROIDISSEUR

4) Installez le refroidisseur sur le support en vous assurant que ceux-ci sont bien installés dans les fentes à l'arrière du refroidisseur tel qu'indiqué à la figure 2 ou 3.
5) Dégagez les deux (2) vis retenant le panneau inférieur avant au bas de la base du refroidisseur ainsi que deux (2) vis sur le dessus **(Employez le peu Torx vendu séparément)**. Retirez le panneau avant et mettez-le de côté.
6) Connectez l'alimentation en eau. - Voir note 4 des instructions générales.
7) Retirez l'écrou coulissant et le joint du siphon et les installer sur la conduite de vidange de la fontaine en s'assurant que l'extrémité de la conduite de vidange s'ajuste dans le siphon. Assembler l'écrou coulissant et le joint sur le siphon et srrer fermement.

MISE EN MARCHE

Voir aussi les Instructions Générales

8) La pression du jet est réglée en usine 3,1 et 3,4 bars. Si la pression d'alimentation varie fortement de cette valeur employer l'ouverture d'accès dans le bouton-poussoir. Un réglage dans le sens des aiguilles d'une montre relève le jet, et un réglage dans le sens contraire l'abaisse (insérez le tournevis). Pour un réglage optimum, le jet doit frapper le bassin à environ 165 mm du barboteur.

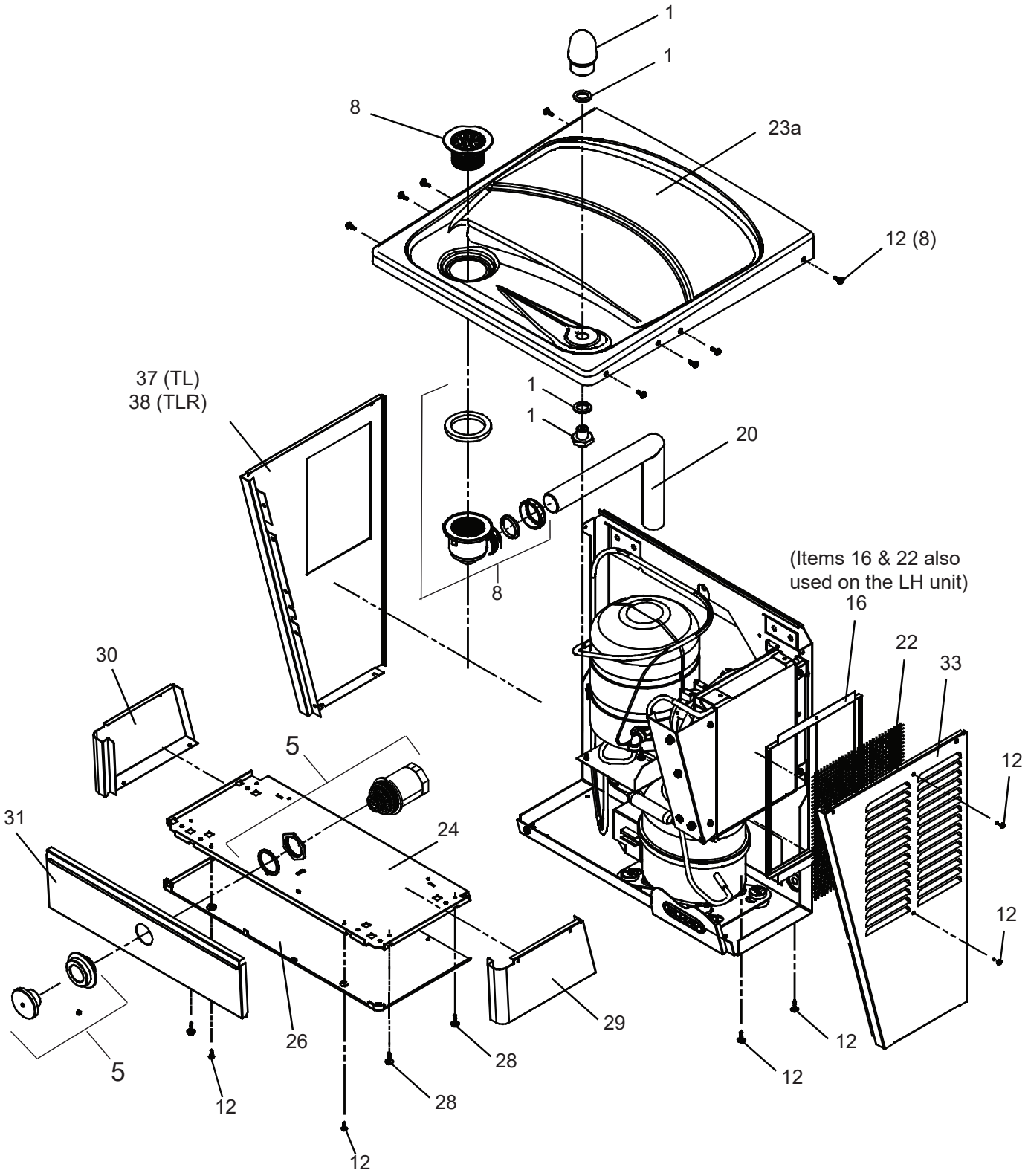

FIG. 8
(Refrigerated side shown)

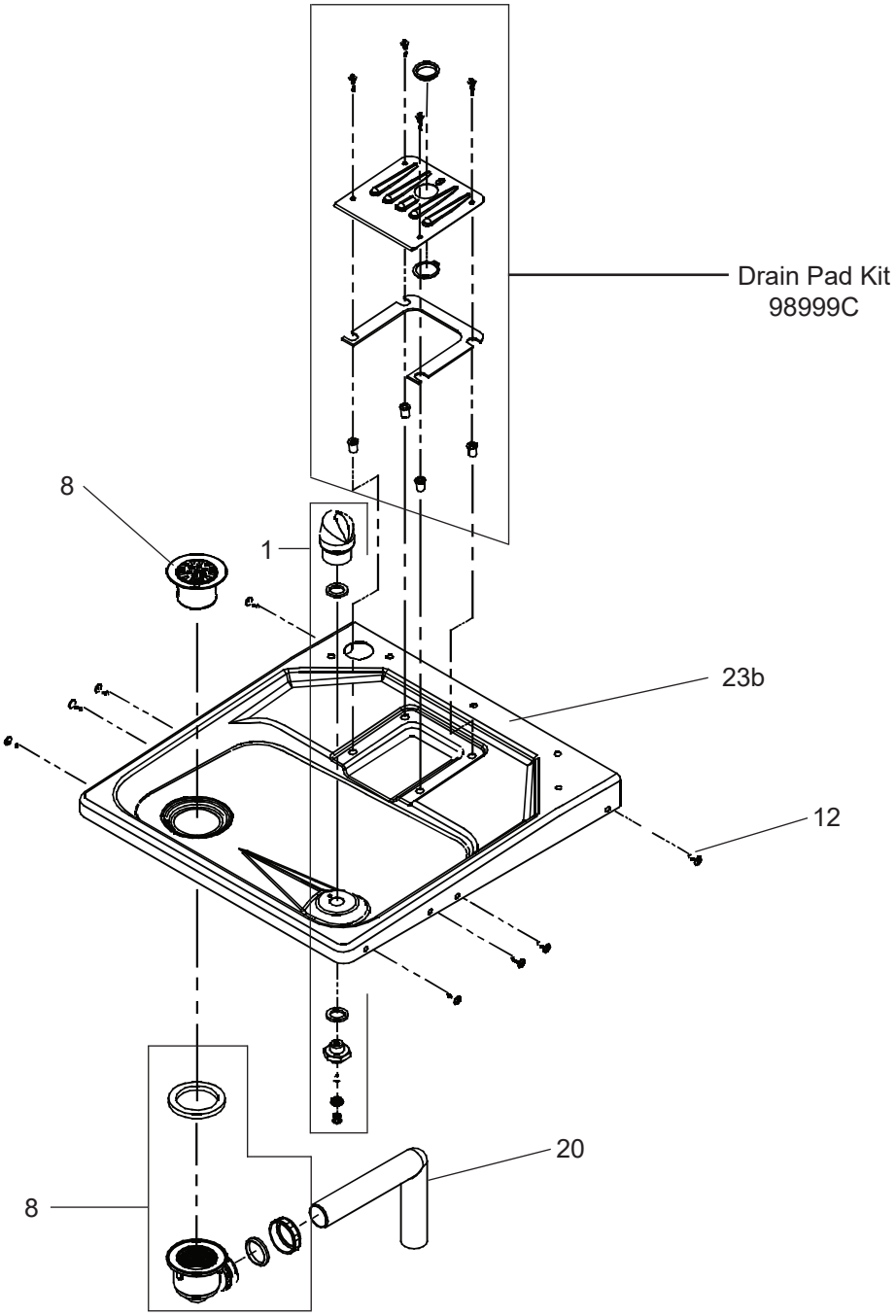

FIG. 9
(Bottle Filler side shown)

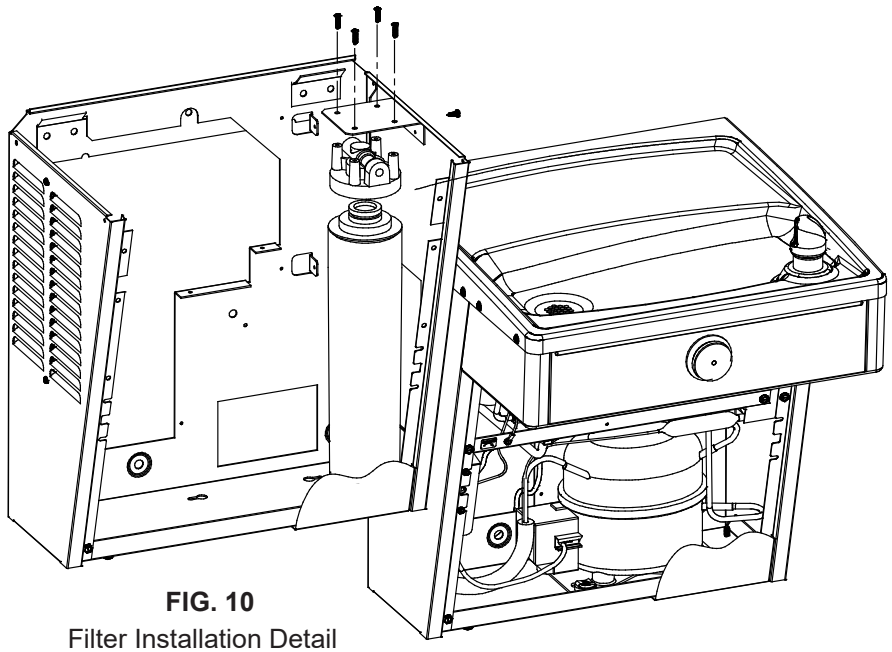

FIG. 10
Filter Installation Detail
Detalle de instalación del filtro
Détail de l'installation du filtre

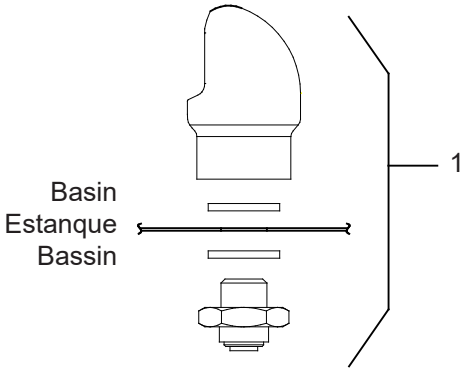

FIG.11
VANDAL RESISTANT BUBBLER DETAIL
DETALLE DEL GRIFO RESISTENTE AL VANDALISMO
DESCRIPTION DU BARBOTEUR RESISTANT AU VANDALISME

Refrig. Unit **Unidad de refrigeración** **Réfrigérateur**	**COLOR TABLE** **PANEL COLOR**	**TABLA DE LOS COLORES** **COLOR DEL PANEL**	**TABLE DE COULEURS** **COULEUR DU PANNEAU**	**Item No. 29 Part No.** Artículos No. No. de Pieza Article Pièce	**Item No. 30 Part No.** Artículos No. No. de Pieza Article Pièce	**Item No. 31 Part No.** Artículos No. No. de Pieza Article Pièce	**Item No. 32 Part No.** Artículos No. No. de Pieza Article Pièce	**Item No. 33 Part No.** Artículos No. No. de Pieza Article Pièce	**Item No. 37 Part No.** Artículos No. No. de Pieza Article Pièce	**Item No. 38 Part No.** Artículos No. No. de Pieza Article Pièce
	Stainless Steel	Acero inoxidable	Acero inoxydable	28519C	28522C	28516C	22955C	28525C	28536C	28562C

Left Unit **Unidad Izquierda** **élément de gauche**	**COLOR TABLE** **PANEL COLOR**	**TABLA DE LOS COLORES** **COLOR DEL PANEL**	**TABLE DE COULEURS** **COULEUR DU PANNEAU**	**Item No. 29 Part No.** Artículos No. No. de Pieza Article Pièce	**Item No. 30 Part No.** Artículos No. No. de Pieza Article Pièce	**Item No. 31 Part No.** Artículos No. No. de Pieza Article Pièce	**Item No. 32 Part No.** Artículos No. No. de Pieza Article Pièce	**Item No. 34 Part No.** Artículos No. No. de Pieza Article Pièce	**Item No. 35 Part No.** Artículos No. No. de Pieza Article Pièce	**Item No. 36 Part No.** Artículos No. No. de Pieza Article Pièce
	Stainless Steel	Acero inoxidable	Acero inoxydable	28519C	28522C	28516C	22955C	28528C	28539C	28559C

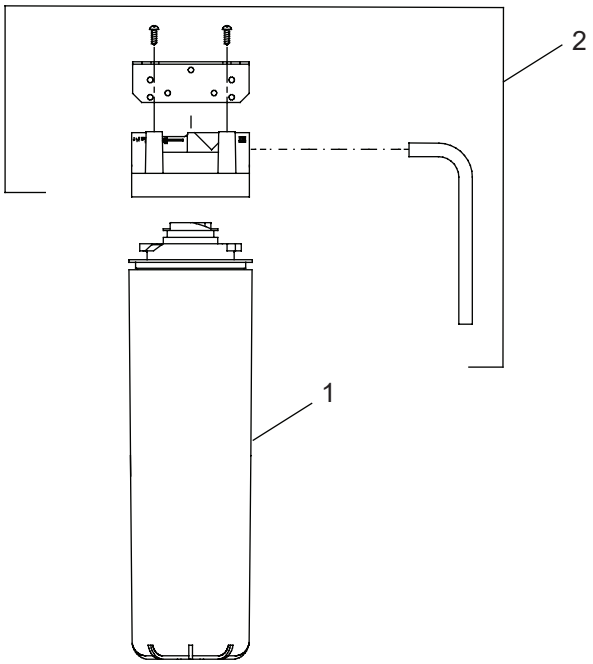

FIG. 12

Water Filter Exploded View
Filtro de agua despiece
Vue éclatée de l'eau filtre

Scan for troubleshooting information and to subscribe to automatic filter replacements at a discount.

WATERSENTRY® PLUS FILTER PARTS LIST		
ITEM NO.	PART NO.	DESCRIPTION
1	51300C	Filter Assy-3000 Gallon (Single)
	51300C_12PK	Filter Assy-3000 Gallon (12 Pack)
2	1000003563	Assy-Filter Head & Brkt includes Filter Head/ Mtg Brkt/John Guest Ftgs/Screws

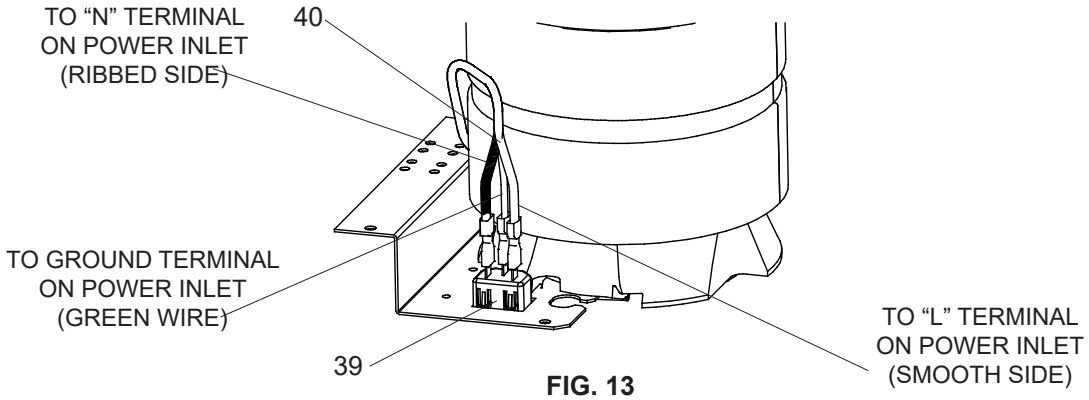

FIG. 13
220V/240V Power Inlet Detail
220V/240V potencia entrada detalle
220V/240V alimentation détail

PARTS LIST 220/240V - LISTA DE PIEZAS 220/240V - LISTE DES PIÈCES 220/240V

ITEM NO.	PART NO.	DESCRIPTION	DESCRIPCIÓN	DESCRIPTION
3	0000000245	Kit - Fan Motor/Blade/Shroud/Nut/Screws	Kit - ventilador Motor/Cuchilla/cubierta/tuerca/tornillos	Kit - ventilateur moteur/lame/carénage/écrou/vis
*10	1000002147	Compressor Service Pak (50Hz)	Paquete de Servicio del Compressor (50 Hz)	Trousse d'entr. supresseur (50Hz)
	1000002146	Compressor Service Pak (60Hz)	Paquete de Servicio del Compressor (60 Hz)	Trousse d'entr. supresseur (60Hz)
11	98751C	Kit - Relay/Overload/Cover (50Hz)	Kit - Relay/sobrecarga/cubierta (50Hz)	Kit - Relais/surcharge/Cover (50 Hz)
	98752C	Kit - Relay/Overload/Cover (60Hz)	Kit - Relay/sobrecarga/cubierta (60Hz)	Kit - Relais/surcharge/Cover (60 Hz)
39	35826C	Power Inlet	Entrada De Eléctrico	Entrée d'alimentation
40	35827C	Wire Assembly	Montaje del alambre	Fil assemblée

***REPLACE WITH SAME COMPRESSOR USED IN ORIGINAL ASSEMBLY.**
NOTE: All correspondence pertaining to any of the above water coolers or orders for repair parts MUST include Model No. and Serial No. of cooler, name and part number of replacement part.

***REEMPLACE CON EL MISMO COMPRESOR USADO EN EL ENSAMBLADO INICIAL.**
NOTA: Toda la correspondencia relacionada con el enfriador de agua anterior o con una orden de reparación piezas DEBERÁ incluir el número de modelo y número de serie del enfriador, el nombre y número de pieza de la pieza de repuesto.

***REMPLACEZ AVEC LE MÊME SURPRESSEUR QUE CELUI UTILISÉ ORIGINALEMENT.**
NOTE : Toute correspondance au sujet des refroidisseurs d'eau courante ou toute commande de pièce de rechange DOIT inclure le numéro de modèle et le numéro de série du refroidisseur ainsi que le nom et le numéro de pièce à remplacer.

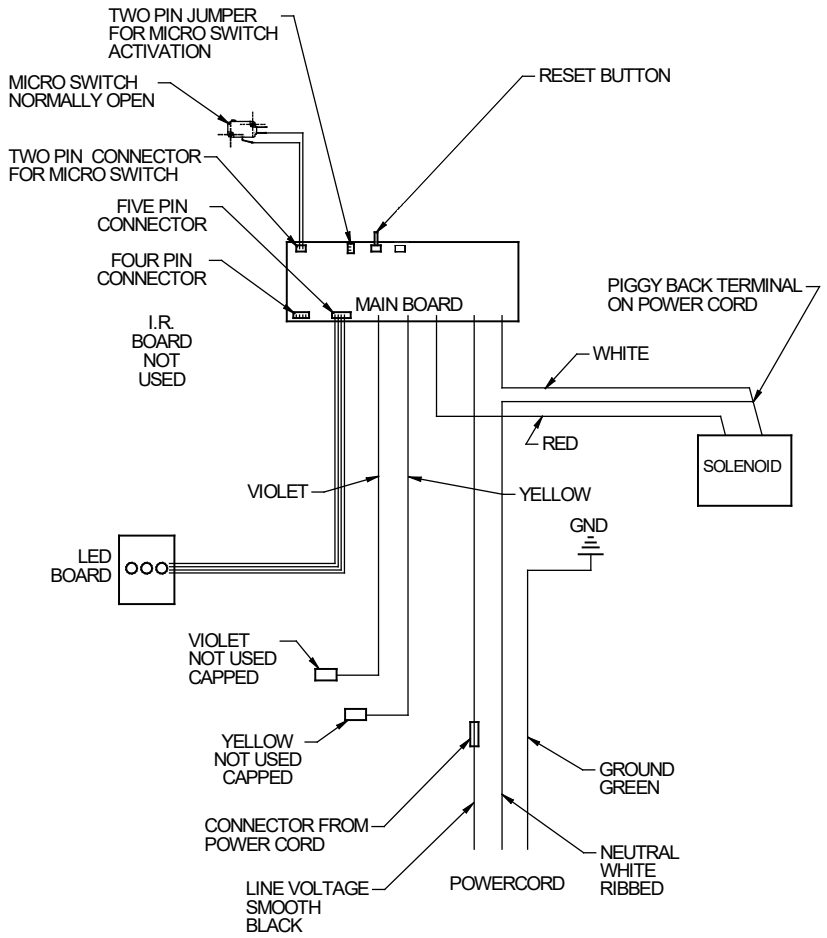

WIRING DIAGRAM 120 VOLT & 220 VOLT SINGLE & BI-LEVEL MICRO SWITCH ACTIVATION
DIAGRAMA DE CABLEADO DE 120 VOLTIOS Y 220 VOLTIOS SOLO Y BIPAP MICRO INTERRUPTOR ACTIVACIÓN
SCHÉMA DE CÂBLAGE 120 VOLTS & 220 VOLT SINGLE & VNDP MICRO INTERRUPTEUR D'ACTIVATION

FIG. 14

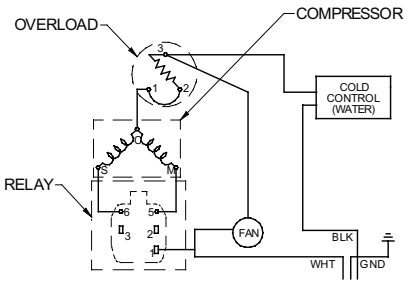

115V Wiring Diagram
Esquema eléctrico 115V
Diagramme de câblage 115V

FIG. 15

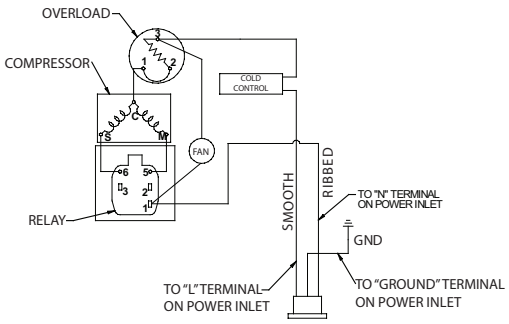

220V Wiring Diagram
Esquema eléctrico 220V
Diagramme de câblage 220V

FIG. 16

BF9 PROGRAM
SETTING THE CONTROL BOARD

VERIFY CONTROL BOARD SOFTWARE

1) To verify the software program of the control board the unit will need to be shut down and restarted. The chiller (if present) does not need to be shut down and restarted.
2) The units lower panel must be open to access the power cord and wall outlet.
3) Shut down the unit by unplugging the power cord from the wall outlet.
4) Restart the unit by plugging the power cord back into the wall outlet.
5) Upon start up the bottle count display will show the software designation of BF9.

ACCESSING THE PROGRAMMING BUTTON

1) To access the program button remove the bottom cover of the water cooler. The reset button is located on the left side of the cooler near the cold control. Replace the bottom cover after programming operations are completed.
NOTE: There is a reset button located under the top cover on the left hand side of the bottle filler also.

RESET THE FILTER MONITOR

1) Instructions apply to filtered units only.
2) Depress the program button for approximately 2 seconds until the display changes then release. The display will change and scroll through two messages:
"RST FLTR" – Reset Filter Monitor
"SETTINGS" – System Settings Sub Menu
If the program button is not pushed again the display will scroll through the two messages above for three cycles and then default back to bottle count and be back in run mode.
3) When the display changes to "RST FLTR", depress the button again. The display will change to show "FLT =". Depress the button again and the display will show "FLTR =0"
4) The Green LED should be illuminated indicating that the visual filter monitor has been reset.

SETTING UNIT TYPE

1) Depress the program button for approximately 2 seconds until the display changes then release. The display will change and scroll through two messages:
"RST FLTR" – Reset Filter Status LED
"SETTINGS" – System Settings Sub Menu
If the program button is not pushed again the display will scroll through the two messages above for three cycles and then default back to bottle count and be back in run mode.
2) When the display changes to "SETTINGS", depress the button again. The display will change to show
"RNG SET"- Range set for IR sensor.
"UNIT TYP" - Type of unit (REFRIG or NON-REFRIG)
"RST BCNT" - Reset bottle count
3) When display shows "UNIT TYPE" push program button once the display will show current value
Can be REFRIG or NON-REFRIG
4) Push button once to change value. Once value is selected the display will show the new value.
(Can be REFRIG or NON-REFRIG)
"REFRIG" - stands for refrigerated product. In this setting the flow rate is estimated at 1.0 gallon per minute.
"NON-REFRIG" - stands for non-refrigerated product. In this setting the flow rate is estimated at 1.5 gallons per minute.
Both "REFRIG" and "NON-REFRIG" simulated 1 bottle equal to 20 oz.
5) Allow approximately 4 seconds to pass and the display will return to bottle counter and be in run mode.

RESETTING BOTTLE COUNT

1) Depress the program button for approximately 2 seconds until the display changes then release. The display will change and scroll through two messages:
"RST FLTR" – Reset Filter Status LED
"SETTINGS" – System Settings Sub Menu
If the program button is not pushed again the display will scroll through the two messages above for three cycles and then default back to bottle count and be back in run mode.
2) When the display changes to "SETTINGS", depress the button again. The display will change to show
"RNG SET"- Range set for IR sensor.
"UNIT TYP" - Type of unit (REFRIG or NON-REFRIG)
"RST BCNT" - Reset bottle count
If the button is not pushed again the display will scroll through the three messages above for three cycles and return to run mode.
3) When display shows "RST BCNT" push program button once the display will show current value e.g. "00033183".
4) Once display shows current value push the program button once more to reset back to 0. The display will show BTLCT = 0 for approximately 2 seconds and then return to run mode showing 00000000 bottles.
5) To test bottle counter:
REFRIG units: Push and hold Bottle Filler Button for 9.4 seconds to see bottle counter count 00000001.
(This is based on filling a 20 oz. bottle).
NON-REFRIG units: Push and hold Bottle Filler Button for 6.25 seconds to see bottle counter count 00000001.
(This is based on filling a 20 oz. bottle)

BF11 - BF12 PROGRAM
SETTING THE CONTROL BOARD

VERIFY CONTROL BOARD SOFTWARE

1) To verify the software program of the control board the unit will need to be shut down and restarted. The chiller (if present) does not need to be shut down and restarted.
2) The units lower panel must be open to access the power cord and wall outlet.
3) Shut down the unit by unplugging the power cord from the wall outlet or switching off the circuit breaker to the unit.
4) Restart the unit by plugging the power cord back into the wall outlet or by switching on the circuit breaker to the unit.
5) Upon start up, the bottle count display will show the software designation of BF11 or BF12.

ACCESSING THE PROGRAMMING BUTTON

1) To access the program button, remove the top cover of the bottle-filler. Remove the two (2) screws holding top cover to bottle-filler with a 5/32" allen wrench. Remove top cover. Do not discard mounting screws, they will be needed to reinstall the top cover after programming operations are completed. The programming button is located at the top right side of the unit on the control board.

RESET THE FILTER MONITOR

1) Instructions apply to filtered units only.
2) Depress the program button for approximately 2 seconds until the display changes then release. The display will change and scroll through two messages:
   "RST FLTR" – Reset Filter Monitor
   "SETTINGS" – System Settings Sub Menu
   If the program button is not pushed again the display will scroll through the two messages above for three cycles and then default back to bottle count and be back in run mode.
3) When the display changes to "RST FLTR", depress the button again. The display will change to show "FLTR =". Depress the button again and the display will show "FLTR =0"
4) The Green LED should be illuminated indicating that the visual filter monitor has been reset.

SETTING RANGE OF THE IR SENSOR WHERE APPLICABLE

1) Depress the program button for approximately 2 seconds until the display changes then release. The display will change and scroll through two messages:
   "RST FLTR" – Reset Filter Status LED
   "SETTINGS" – System Settings Sub Menu
   If the program button is not pushed again the display will scroll through the two messages above for three cycles and then default back to bottle count and be back in run mode.
2) When the display changes to "SETTINGS", depress the button again. The display will change to show
   "RNG SET" - Range set for IR sensor.
   "UNIT TYP" - Type of unit (REFRIG or NON-RFRG)
   "FLT SIZE" - Select filter capacity
   "RST BCNT" - Reset bottle count
3) When display shows "RNG SET" push program button once the display will show current value (can be 1 – 10) e.g. "RNG = 3".
4) Once display shows current value push the program button to scroll through value of 1 – 10. Select the desired range setting, "1" being closest to sensor and "10" being farthest away.
5) Once range is selected allow approximately 4 seconds to pass and then the display will go back to bottle counter and be in run mode.
6) Test bottle filler by placing bottle or hand in front of sensor to make sure water is dispensed.

SETTING UNIT TYPE

1) Depress the program button for approximately 2 seconds until the display changes then release. The display will change and scroll through two messages:
   "RST FLTR" – Reset Filter Status LED
   "SETTINGS" – System Settings Sub Menu
   If the program button is not pushed again the display will scroll through the two messages above for three cycles and then default back to bottle count and be back in run mode.

Continued from below:

2) When the display changes to "SETTINGS", depress the button again. The display will change to show
   "RNG SET" - Range set for IR sensor.
   "UNIT TYP" - Type of unit (REFRIG or NON-RFRG)
   "FLT SIZE" - Select filter capacity
   "RST BCNT" - Reset bottle count
3) When display shows "UNIT TYPE" push program button once the display will show current value. Can be REFRIG or NON-RFRG
4) Push button once to change value. Once value is selected the display will show the new value. (Can be REFRIG or NON-RFRG)
   "REFRIG" - stands for refrigerated product. In this setting the flow rate is estimated at 1.0 gallon per minute.
   "NON-RFRG" - stands for nonrefrigerated product. In this setting the flow rate is estimated at 1.5 gallons per minute. Both "REFRIG" and "NON-RFRG" simulate 1 bottle equal to 20 oz.
5) Allow approximately 4 seconds to pass and the display will return to bottle counter and be in run mode.

RESETTING BOTTLE COUNT

1) Depress the program button for approximately 2 seconds until the display changes then release. The display will change and scroll through two messages:
   "RST FLTR" – Reset Filter Status LED
   "SETTINGS" – System Settings Sub Menu
   If the program button is not pushed again the display will scroll through the two messages above for three cycles and then default back to bottle count and be back in run mode.
2) When the display changes to "SETTINGS", depress the button again. The display will change to show:
   "RNG SET"- Range set for IR sensor.
   "UNIT TYP" - Type of unit (REFRIG or NON-RFRG)
   "FLT SIZE" - Select filter capacity
   "RST BCNT" - Reset bottle count
   If the button is not pushed again the display will scroll through the four messages above for three cycles and return to run mode.
3) When display shows "RST BCNT" push program button once the display will show current value, e.g. "0033183".
4) Once display shows current value push the program button once more to reset back to 0. The display will show BTLCT = 0 for approximately 2 seconds and then return to run mode showing 00000000 bottles.
   NOTE: Once the bottle count is reset to zero there is no way to return to the previous bottle count.
5) Testing the bottle counter:
   REFRIG units: Place bottle or hand in front of sensor for approximately 9 seconds to see bottle counter count 00000001,
   (This is based on filling a 20 oz. bottle).
   NON-RFRG units: Place bottle or hand in front of sensor for approximately 6 seconds to see bottle counter count 00000001,
   (This is based on filling a 20 oz bottle).

SETTING FILTER CAPACITY

1) Depress the program button for approximately 2 seconds until the display changes then release. The display will change and scroll through two messages:
   "RST FLTR" – Reset Filter Status LED
   "SETTINGS" – System Settings Sub Menu
   If the program button is not pushed again the display will scroll through the two messages above for three cycles and then default back to bottle count and be back in run mode.
2) When the display changes to "SETTINGS", depress the button again. The display will change to show:
   "RNG SET"- Range set for IR sensor.
   "UNIT TYP" - Type of unit (REFRIG or NON-RFRG)
   "FLT SIZE" - Select filter capacity
   "RST BCNT" - Reset bottle count
   If the button is not pushed again the display will scroll through the four messages above for three cycles and return to run mode.
3) When display shows "FLT SIZE" push program button once. The display will show current value. Can be 3000GAL or 6000GAL.
4) Push program button again to display the desired "FLT SIZE".
5) Allow approximately 4 seconds to pass and the display will return to bottle counter and be in run mode.

115V PARTS LIST/ 115V LISTA DE PIEZAS/ 115V LISTE DES PIÈCES

ITEM NO.	PART NO.	DESCRIPTION	DESCRIPCIÓN	DESCRIPTION
1	97446C	Bubbler Assy-VR	Conjunto de Pelele - resistente al vandalismo	Barboteur Assemblée-anti-vandale
2	98777C	Kit - Compr Hardware/Clips/Studs/Grommets	Kit - compresor Hardware/Clips/espárragos/ojales	Kit - compresseur matériel/Clips/goujons/oeillets
3	98775C	Kit - Fan Motor/Blade/Shroud/Nut/Screws	Kit - ventilador Motor/Cuchilla/cubierta/tuerca/tornillos	Kit - ventilateur moteur/lame/carénage/écrou/vis
4	98776C	Kit - Condenser/Drier	Kit - secador de condensador	Kit - condenseur/séchoir
5	2000002504	Kit- Regulator- VR Push Button	Kit- Regulador- Pulsador VR	Kit - Régulateur - Bouton poussoir VR
6	56092C	Tubing - Poly (Cut To length)	Tuberla de polietileno (Corte a la longitud)	Tubes - Polyéthyléne (Couper à la longueur)
7	98773C	Kit - Cold Cotrol/Screws	Kit - tornillos de Control de frío	Kit - froids/vis de réglage
8	1000001889	Kit - Drain Replacement	Kit - Reemplazo de drenaje	Kit - Remplacement de drain
9	35870C	Power Cord	Cable Eléctrico	Cordon d'alimentation
*10	36322C	Compressor Serv. Pak	Paquete de Serv. del Compresor	Trousse d 'entr. Supreeeur
11	0000000238	Kit - Relay/OverLoad/Cover	Kit - Relay/sobrecarga/cubierta	Kit - Relais/surcharge/Cover
12	0000001190	Kit - #10 Pinned Torx Screws/T-25 Bit	Kit - Torx #10 cubrió tornillos/T-25 bit	Kit - #10 épinglé Torx vis/T-25 bit
13	1000001602	Kit - Elbow 5/16" - 1/4" (3 Pack)	Kit - codo 5/16 "- 1/4" (paquete de 3)	Kit - coude 5/16" - 1/4" (Pack de 3)
14	1000001994	Kit - Tee 1/4" (3 Pack)	Kit - t 1/4" (paquete de 3)	Kit - Tee 1/4" (Pack de 3)
15	98778C	Kit - Heat Exchanger/Drier	Kit - secador de intercambiador de calor	Kit - échangeur thermique/séchoir
16	28596C	Panel - Screen	Panel - Pantalla	Panneau - Écran
17	66703C	Drier	Secador	Déshydrateur
18	98724C	Evaporator Replacement Assembly	Conjunto de repuesto evaporador	Ensemble de rechange évaporateur
19	70002C	Screw - #10 x 1/2" Lg. HHSM	Tornillo - #10 x 1/2" Lg. HHSM	Vis - #10 x 1/2 Lg. HHSM
20	45929C	Tube - Drain	Tubo de drenaje-	Tube - Drain
21	75524C	Clip (Front & Rear Panels)	Brida (Paneles frontales y posteriores)	Pince (panneaux avant et arrière)
22	28617C	Screen - VR	Pantalla - VR	Écran - VR
23a	0000000966	Kit - Basin - Stainless Steel	Kit - La palangana - Acero que no se Mancha	Kit - Le bassin - l'Acier de Stainless
23b	29014C	Basin - Stainless Steel (BF)	Cuenca - rellenadores de botellas de acero inoxidable (BF)	Bassin - remplisseur de bouteille en acier inoxyd (BF)
24	22897C	Panel - Bottom Dispenser	Panel - Dispensador Inferior	Panneau - distributeur inférieur
25	27124C	Cover - Cold Control	Cubierta de Control del Frio	Couvercle de Commande d'eau froide
26	55931C	Cover - Dispenser Bottom	Cubierta-Dispensador Inferior	Couvercle - distributeur inférieur
27	1000004447	Kit - Drain Tube Assy.	Kit - Conjunto de tubo de desagüe	Kit - Tube de vidange
28	70864C	Screw - #8 x .62 Torx/Slot	Tornillo - #8 x .62 Torx/Slot	Vis - #8 x .62 Torx/Slot
29	See Color Table	Panel - RH Dispenser Side	Panel - Lado derecho	Panneau - côté droit
30	See Color Table	Panel - LH Dispenser Side	Panel - Lado izquierdo	Panneau - côté gauche
31	See Color Table	Panel - Dispenser Front	Panel - Dispensador Frontal	Panneau - avant
32	See Color Table	Panel - Front Lower (Not Shown)	Panel - Frente Inferior (No mostrada)	Panneau - avant inférieur (Pas montré)
33	See Color Table	Panel - RH Rear	Panel - Retrovisor Derecho	Panneau - arrière droit
34	See Color Table	Panel - LH Rear	Panel - Retrovisor Izquierdo	Panneau - arrière gauche
35	See Color Table	Panel - RH Rear TL	Panel - Retrovisor Derecho TL	Panneau - arrière droit TL
36	See Color Table	Panel - RH Rear TLR	Panel - Retrovisor Derecho TLR	Panneau - arrière droit TLR
37	See Color Table	Panel - LH Rear TL	Panel - Retrovisor Izquierdo TL	Panneau - arrière gauche TL
38	See Color Table	Panel - LH Rear TLR	Panel - Retrovisor Izquierdo TLR	Panneau - arrière gauche TLR
NS	55996C	Strainer (See "General Instructions")	Filtro Bifurcado (Vea "Instrucciones Generales")	Grille (Voir "Directives Générales")
NS	28551C	Hanger Bracket	El Paréntesis del gancho	Crochet de cintre
NS	29032C	Mounting Bracket	Soporte de montaje	Support de montage

NS - NOT SHOWN

***REPLACE WITH SAME COMPRESSOR USED IN ORIGINAL ASSEMBLY.**
NOTE: All correspondence pertaining to any of the above water coolers or orders for repair parts MUST include Model No. and Serial No. of cooler, name and part number of replacement part.

***REEMPLACE CON EL MISMO COMPRESOR USADO EN EL ENSAMBLADO INICIAL.**
NOTA: Toda la correspondencia relacionada con el enfriador de agua anterior o con una orden de reparación piezas DEBERÁ incluir el número de modelo y número de serie del enfriador, el nombre y número de pieza de la pieza de repuesto.

***REMPLACEZ AVEC LE MÊME SURPRESSEUR QUE CELUI UTILISÉ ORIGINALEMENT.**
NOTE : Toute correspondance au sujet des refroidisseurs d'eau courante ou toute commande de pièce de rechange DOIT inclure le numéro de modèle et le numéro de série du refroidisseur ainsi que le nom et le numéro de pièce à remplacer.

BOTTLE FILLER REPLACEMENT PART KITS BOTELLA RELLENO REEMPLAZO PARTE KITS BOUTEILLE DE REMPLISSAGE REMPLACEMENT PARTIE KITS

PART NO.	DESCRIPTION	DESCRIPCIÓN	DESCRIPTION
98543C	Kit - Electrical Package	Kit - paquete eléctrico	Kit - Package électrique
1000004770	Kit - Solenoid Valve Replacement 115V	Kit - reemplazo de la válvula de solenoide 115V	Kit - remplacement de la Valve solénoïde 115V
98546C	Kit - Aerator Replacement	Kit - reemplazo de aireador	Kit - aérateur Remplacement
98549C	Kit - Hardware & Waterway Parts	Kit - Hardware y partes de la canal	Kit - matériel & Waterway pièces
98552C	Kit - Retro Filter Mounting	Kit - Retro montaje del filtro	Kit - rétro montage du filtre
98631C	Kit - Electrical Package 220V	Kit - paquete eléctrico 220V	Kit - Package électrique 220V
1000004771	Kit - Solenoid Valve Replacement 220V	Kit de reemplazo de la válvula de solenoide 220V-	Kit - remplacement de la Valve solénoïde 220V
98668C	Kit - Filter Mounting Cover	Kit de montaje tapa del filtro-	Kit - couverture de montage du filtre
98999C	Kit - Drain Pad	Kit de drenaje de Pad-	Kit - Drain Pad
99000C	Kit - Button Assembly	Kit - conjunto de botón	Kit de montage de bouton
1000001907	Kit - Top Cover Replacement	Kit - reemplazo de la cubierta superior	Kit - remplacement du capot supérieur
2000001488	Universal Bottle Filler Gasket	Joint de remplissage de bouteille universel	Junta de llenado de botellas universal
99003C	Kit - Reset Switch	Kit - interruptor de reinicio	Kit - interrupteur de réinitialisation
99004C	Kit - Micro Switch	Kit - interruptor Micro	Kit - Micro interrupteur

98982C

Patent zurnelkay.com/patents

FOR PARTS, CONTACT YOUR LOCAL DISTRIBUTOR OR CALL 1.800.834.4816
PARA PIEZAS, CONTACTE A SU DISTRIBUIDOR LOCAL O LLAME AL 1.800.834.4816
POUR OBTENIR DES PIÈCES, CONTACTEZ VOTRE DISTRIBUTEUR LOCAL OU COMPOSEZ LE 1.800.834.4816

REPAIR SERVICE INFORMATION TOLL FREE NUMBER 1.800.260.6640
NÚMERO GRATIS DE SERVICIO 1.800.260.6640
INFORMATIONS POUR LE SERVICE PAR NUMERO SANS FRAIS 1.800.260.6640

PRINTED IN U.S.A.
IMPRESO EN LOS E.E.U.U.
IMPRIMÉ AUX É.-U.

ELKAY MANUFACTURING CO. • 1333 BUTTERFIELD ROAD SUITE 200 • DOWNERS GROVE • IL 60515 • USA 630.574.8484 • www.elkay.com