ELKAY SPECIFICATIONS

Lustertone Iconix® 18 Gauge Stainless Steel 18-1/2" x 18-1/2" x 9" Single Bowl Undermount Sink

Model(s) ELUH1616T

PRODUCT SPECIFICATIONS

Lustertone Iconix® 18 Gauge Stainless Steel 18-1/2" x 18-1/2" x 9" Single Bowl Undermount Sink. Sink is manufactured from 18 gauge 304 Stainless Steel with a Luminous Satin finish, Rear Center drain placement, and Sides and Bottom pads.

Installation Type:	Undermount
Material:	304 Stainless Steel
Finish:	Luminous Satin
Gauge:	18
Sound Deadening:	Sides and Bottom pads
Number of Bowls:	1
Sink Dimensions:	18-1/2" x 18-1/2" x 9"
Bowl 1 Dimensions:	16" x 16" x 9"
Drain Size:	3-1/2" (89mm)
Drain Location:	Rear Center
Minimum Cabinet Size:	24"
Mounting Hardware:	Undermount brackets sold separately
Template Included:	Yes
Cutout Template #:	1000005601

Template is available for download at elkay.com. CAD software will be required to open the template.

Special Note: Reserve Selection products are sold exclusively, in-store and online, through authorized wholesalers.

Installation Profile:

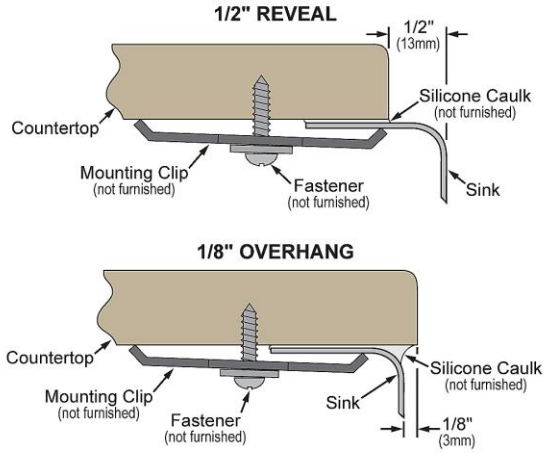

Designed to affix to the underside of any solid surface countertop.

A Century of Tradition and Quality.
For more than 100 years, Elkay has been making innovative products and providing exceptional customer care. We take pride in offering plumbing products that make life easier, inspire change and leave the world a better place.

Product Compliance: ASME A112.19.3/CSA B45.4

Sinks are listed by IAPMO® as meeting the applicable requirements of the Uniform Plumbing Code®, International Plumbing Code®, and National Plumbing Code of Canada.

Clean and Care Manual (PDF)
Installation Instructions (PDF) - 1000005239
Installation Instructions (PDF) - 74180289_Disposer
Installation Instructions (PDF) - 74180340-USA_Drain
Warranty (PDF)

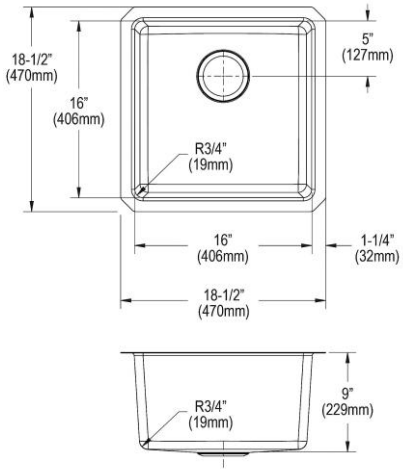

PART:_____QTY: _____

PROJECT:_____

CONTACT:_____

DATE:_____

NOTES:_____

APPROVAL:_____

In keeping with our policy of continuing product improvement, Elkay reserves the right to change product specifications without notice. Please visit elkay.com for the most current version of Elkay product specification sheets. This specification describes an Elkay product with design, quality, and functional benefits to the user. When making a comparison of other producers' offerings, be certain these features are not overlooked. Latest version of the spec sheet available: https://www.elkayfiles.com/spec-sheets/ELUH1616T_spec.pdf

Optional Accessories		
EBG1414	Stainless Steel 14" x 14" x 1-1/4" Bottom Grid Spec Sheet (PDF)	
LKDD	3-1/2" Drain Fitting Deep Strainer Basket Spec Sheet (PDF)	

In keeping with our policy of continuing product improvement, Elkay reserves the right to change product specifications without notice. Please visit elkay.com for the most current version of Elkay product specification sheets. This specification describes an Elkay product with design, quality, and functional benefits to the user. When making a comparison of other producers' offerings, be certain these features are not overlooked. Latest version of the spec sheet available: https://www.elkayfiles.com/spec-sheets/ELUH1616T_spec.pdf

© 2026