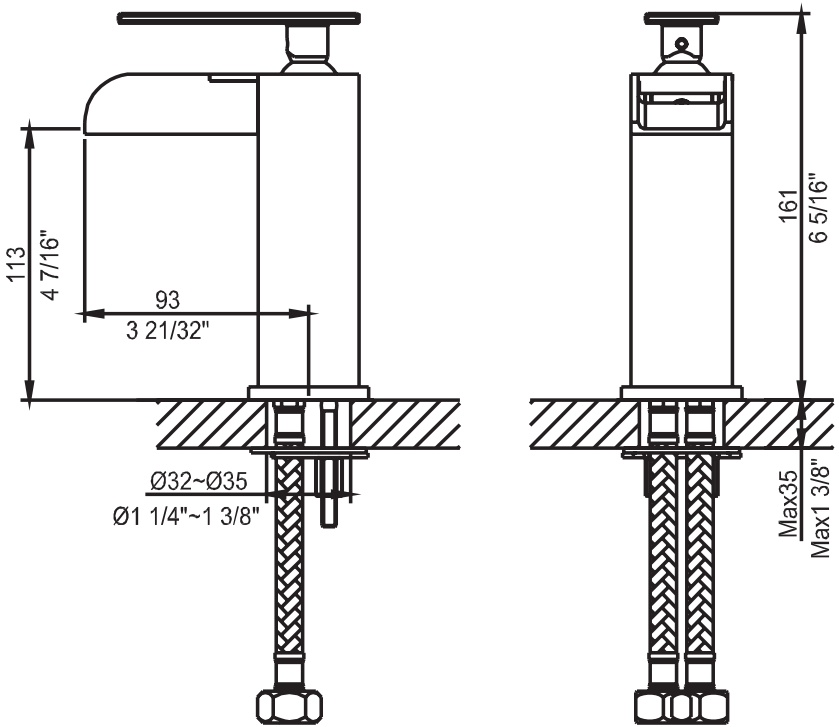
113
4 7/16"
93
3 21/32"
Ø32~Ø35
Ø1 1/4"~1 3/8"
161
6 5/16"
Max35
Max1 3/8"