ELKAY SPECIFICATIONS

Lustertone® Classic Stainless Steel 48" x 22" x 7-5/8" Equal Double Bowl Drop-in Sink w/Right Drainboard

Model(s) ILR4822L

PRODUCT SPECIFICATIONS

Lustertone® Classic Stainless Steel 48" x 22" x 7-5/8" Equal Double Bowl Drop-in Sink w/Right Drainboard. Sink is manufactured from 18 gauge 304 Stainless Steel with a Lustrous Satin finish, Center drain placement, and Bottom only pads.

Installation Type:	Drop-in
Material:	304 Stainless Steel
Special Features:	Drainboard
Finish:	Lustrous Satin
Gauge:	18
Sound Deadening:	Bottom only pads
Number of Bowls:	2
Sink Dimensions:	48" x 22" x 7-5/8"
Bowl 1 Dimensions:	13-1/2" x 16" x 7-1/2"
Bowl 2 Dimensions:	13-1/2" x 16" x 7-1/2"
Drain Size:	3-1/2" (89mm)
Drain Location:	Center
Minimum Cabinet Size:	51"
Mounting Hardware:	Part # 64090008 included for countertops up to 3/4" (19mm) thick
Template Included:	No
Cutout Template #:	1000001284

Template is available for download at elkay.com. CAD software will be required to open the template.

Cutout Dimensions for Drop-in Installation:
47-3/8" x 21-3/8" (1203mm x 543mm) with 1-1/2" (38mm) corner radius

Hole Drilling Configurations:

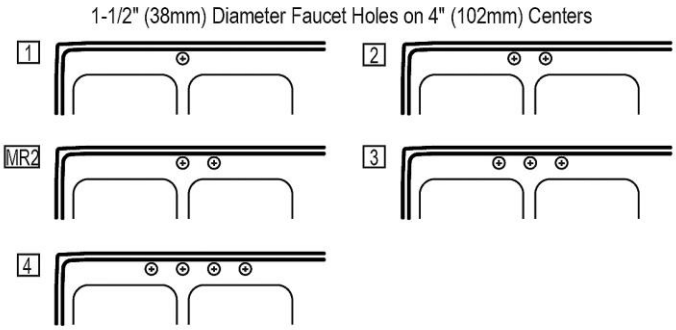

A Century of Tradition and Quality.
For more than 100 years, Elkay has been making innovative products and providing exceptional customer care. We take pride in offering plumbing products that make life easier, inspire change and leave the world a better place.

KBB READERS' CHOICE AWARDS 2025 WINNER

MADE IN USA

Product Compliance: ASME A112.19.3/CSA B45.4

Sinks are listed by IAPMO® as meeting the applicable requirements of the Uniform Plumbing Code®, International Plumbing Code®, and National Plumbing Code of Canada.

Clean and Care Manual (PDF)
Installation Instructions (PDF) - 1000005236
Warranty (PDF)

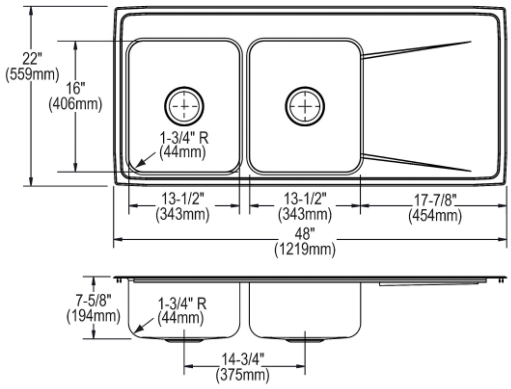

PART:_____QTY: _____

PROJECT:_____

CONTACT:_____

DATE:_____

NOTES:_____

APPROVAL:_____

In keeping with our policy of continuing product improvement, Elkay reserves the right to change product specifications without notice. Please visit elkay.com for the most current version of Elkay product specification sheets. This specification describes an Elkay product with design, quality, and functional benefits to the user. When making a comparison of other producers' offerings, be certain these features are not overlooked. Latest version of the spec sheet available: https://www.elkayfiles.com/spec-sheets/ILR4822L_spec.pdf

© 2026

Installation Profile:

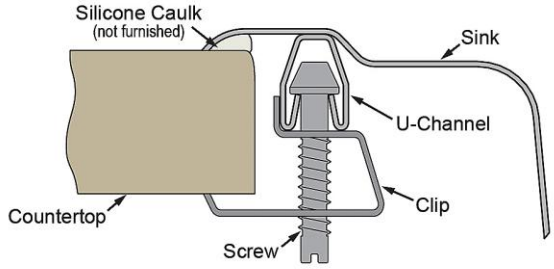

Optional Accessories		
LKWBG1316SS	Stainless Steel 12-1/2" x 15" x 1" Bottom Grid Spec Sheet (PDF)	
CB1613	Hardwood 16-3/4" x 13-1/2" x 1" Cutting Board Spec Sheet (PDF)	
CB1713	Hardwood 13-1/2" x 17" x 1" Cutting Board Spec Sheet (PDF)	
CBS1316	Hardwood 14-1/2" x 17" x 3/4" Cutting Board Spec Sheet (PDF)	
LK99	Deluxe 3-1/2" Drain Type 304 Stainless Steel Body Strainer Basket Rubber Seal and Tailpiece Spec Sheet (PDF)	
LKWRB1316SS	Stainless Steel 12-1/2" x 15" x 7" Rinsing Basket Spec Sheet (PDF)	

In keeping with our policy of continuing product improvement, Elkay reserves the right to change product specifications without notice. Please visit elkay.com for the most current version of Elkay product specification sheets. This specification describes an Elkay product with design, quality, and functional benefits to the user. When making a comparison of other producers' offerings, be certain these features are not overlooked. Latest version of the spec sheet available: https://www.elkayfiles.com/spec-sheets/ILR4822L_spec.pdf